City of Leawood

Public Improvement Construction Standards

March 1, 2015

Table of Contents

01 Residential Street
02 Arterial Street
03 Residential Cul–De–Sac
04 Residential U–drive
05 Median
06 Typical Median
07 Temporary Cul–De–Sac
08 Curb and Gutter
09 Residential Driveway
10 Commercial Driveway
11 Joints
12 Underdrains
13 Trenching and Restoration
14 6 inch Steel Inlet Frame
15 10 inch Steel Inlet Frame
16 Blanket Underdrain
17 Curb Inlet
18 Special Use Curb Inlet Type A
19 Special Use Curb Inlet Type B
20 Non–Setback Curb Inlet
21 Area Inlet
22 Special Use Area Inlet
23 Junction Box
24 Manhole
25 Manhole Cover
26 Concrete Pipe Collar
27 End SectionToe Wall
28 Sidewalk Ramp ADA
29 Sidewalk Ramp ADA – Type A
30 Sidewalk Ramp ADA – Type B
31 Sidewalk Ramp ADA – Type C
32 Sidewalk Ramp ADA – SW REPAIR
33 Sidewalk Ramp ADA – Type B with Curb
34 Sidewalk Retaining Wall
35 Handrail
36 Monument Box
37 Street Extension
38 Sidewalk Paver Crossing
39 Street Light Controller
40 Street Light Foundation
41 Street Light Pole
42 Special Street Light Pole
43 Street Light Wiring

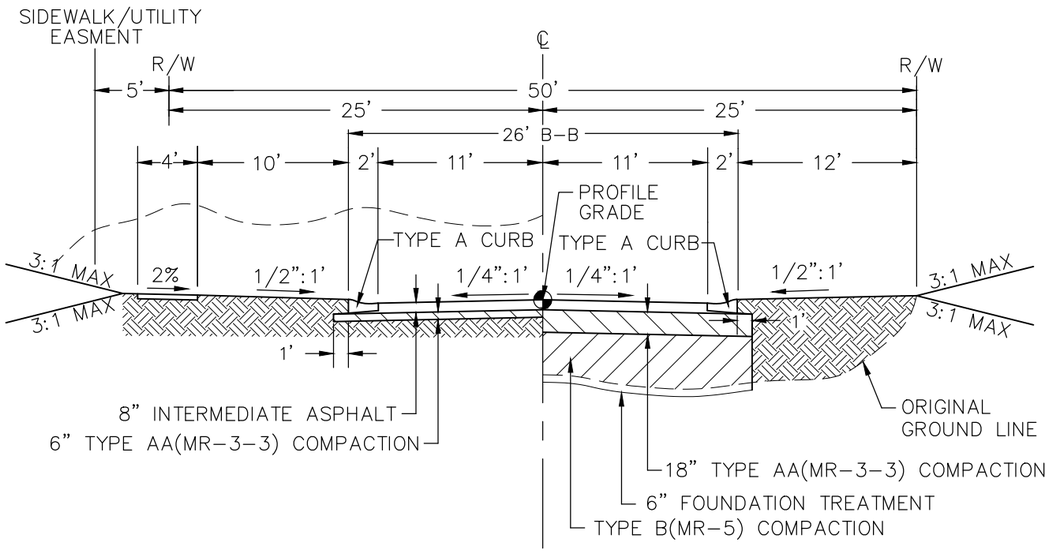

CUT SECTION

FILL SECTION

RESIDENTIAL LOCAL

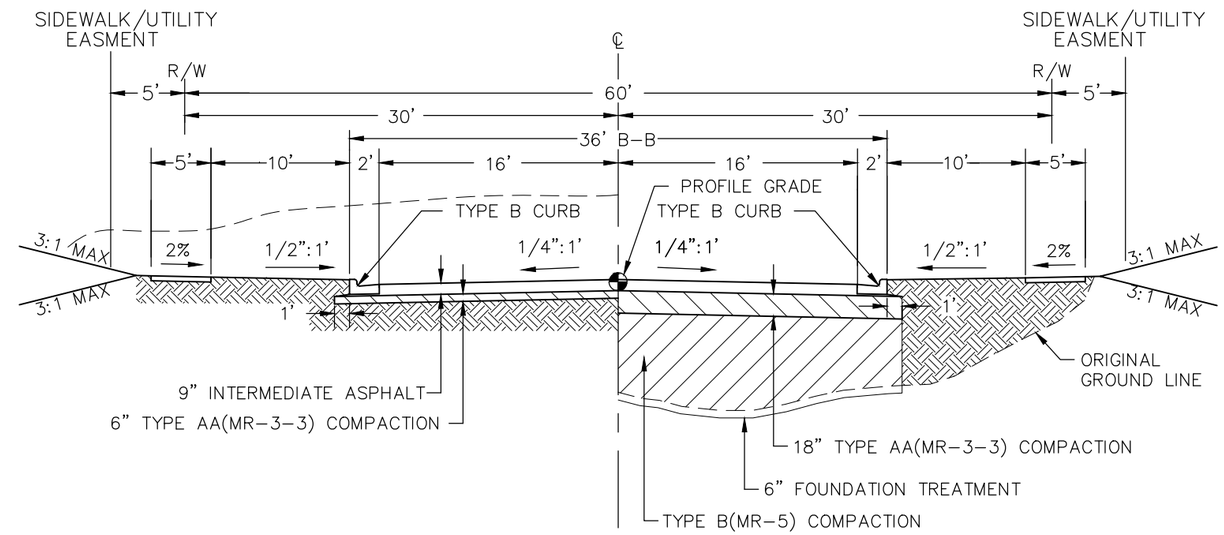

CUT SECTION

FILL SECTION

RESIDENTIAL COLLECTOR

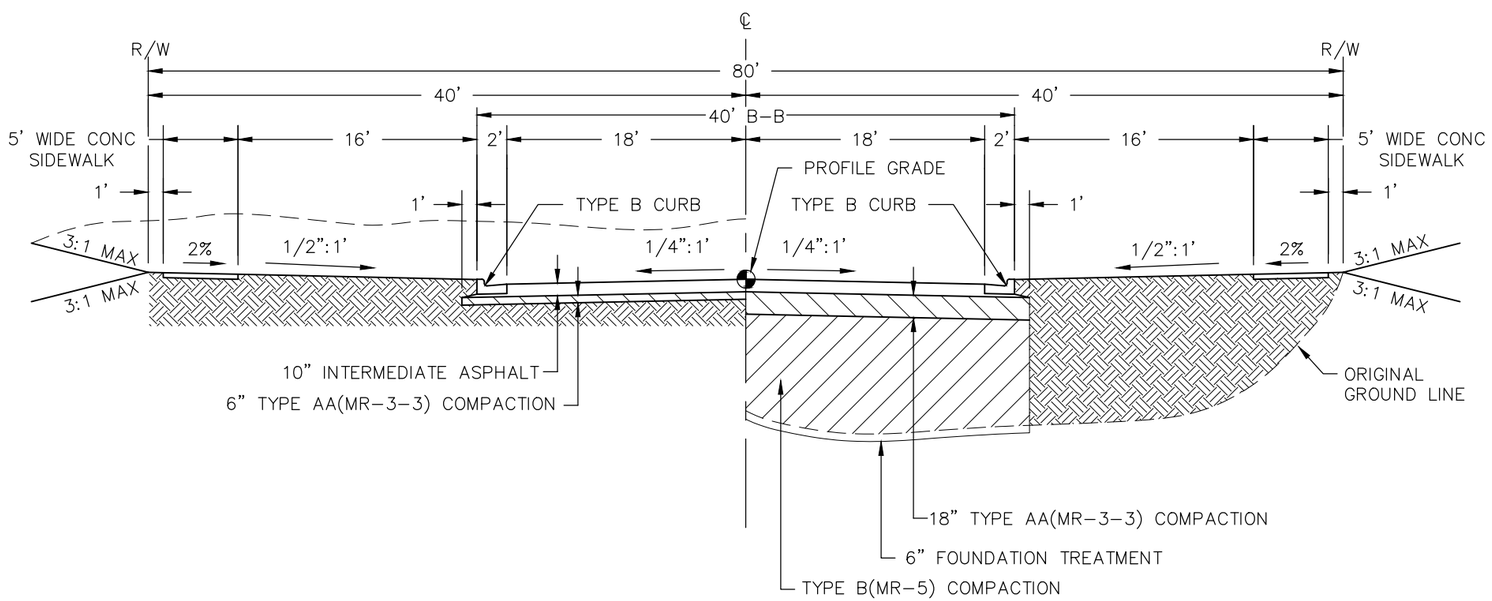

CUT SECTION

FILL SECTION

PRIMARY COLLECTOR

City of Lynnwood

ENGINEERING SERVICES:
DIVISION OF DESIGN
DEPARTMENT OF PUBLIC WORKS
SURVEYING SERVICES:
DIVISION OF DESIGN
DEPARTMENT OF PUBLIC WORKS

REVISIONS	DATE	BY

DATE: DECEMBER 2010
DESIGNED BY: B. LIES
DRAWN BY: DWL
CHECKED BY: DWL
SCALE: NONE
PROJECT NUMBER: N/A

CONSTRUCTION STANDARDS
RESIDENTIAL LOCAL, RESIDENTIAL COLLECTOR,
AND PRIMARY COLLECTOR STREET DETAILS

SHEET NO.	TOTAL SHEETS
01	43

DRAWING: K:\LEAWOOD STANDARDS\CONSTRUCTION\RESIDENTIAL DRIVEWAY.DWG

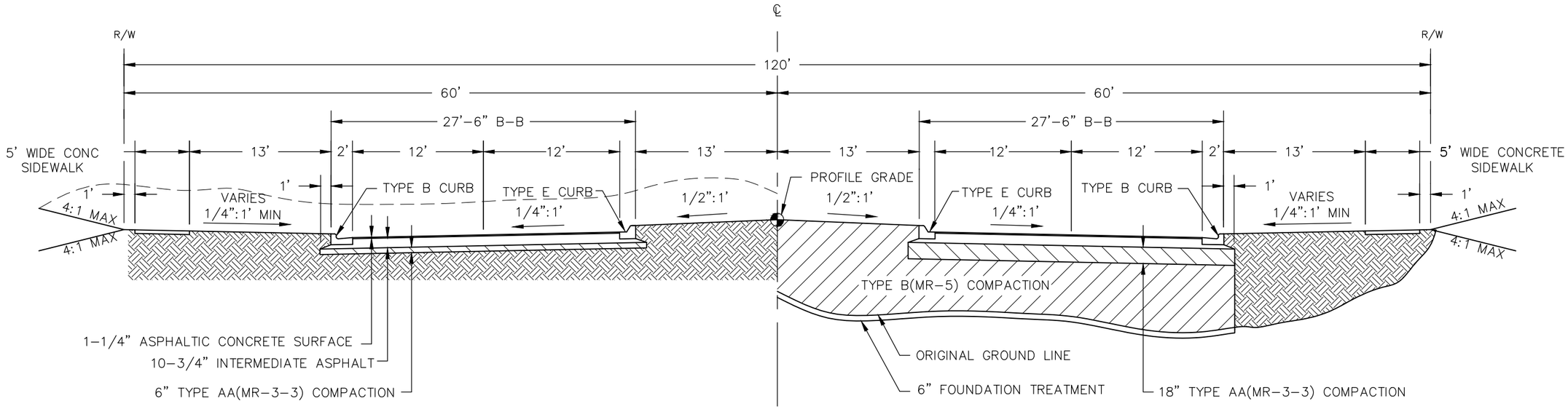

PRIMARY ARTERIAL

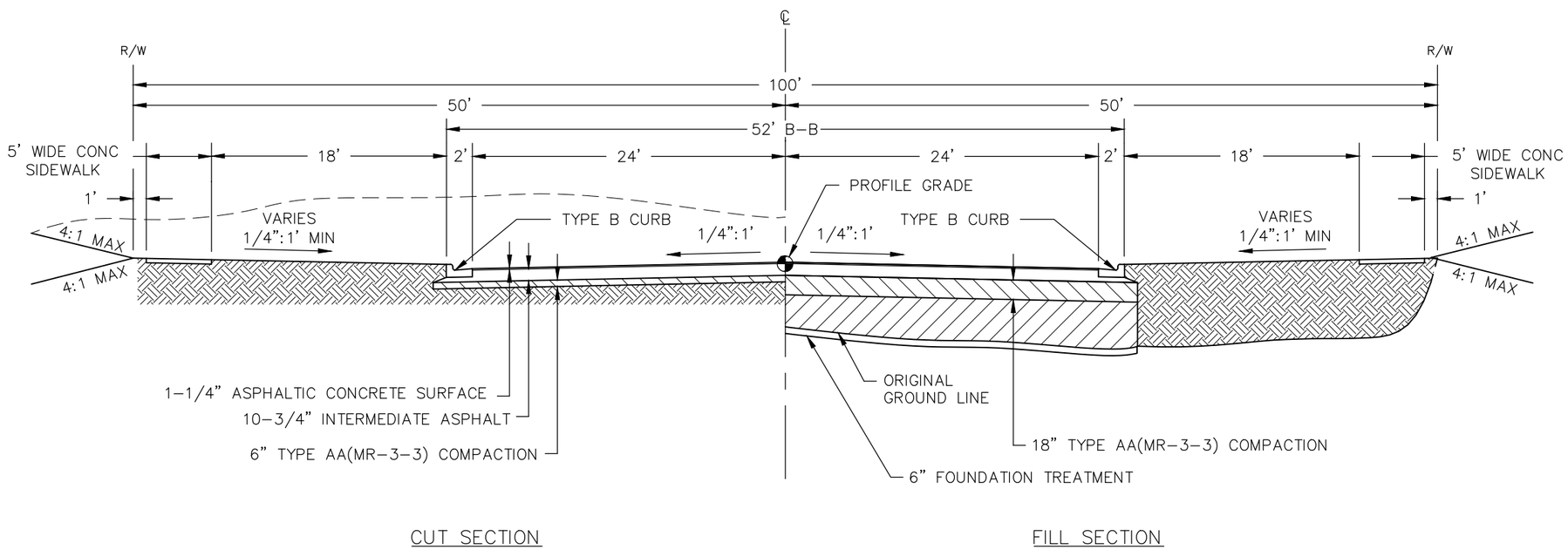

SECONDARY ARTERIAL

DRAWING: K:\LEAWOOD STANDARDS\CONSTRUCTION\RESIDENTIAL DRIVEWAY.DWG

City of Leawood

ENGINEERING SERVICES:
DIVISION OF DESIGN
DEPARTMENT OF PUBLIC WORKS
SURVEYING SERVICES:
DIVISION OF DESIGN
DEPARTMENT OF PUBLIC WORKS

DATE	BY	REVISIONS

DATE: DECEMBER 2010
DESIGNED BY: DWL
DRAWN BY: MRS
CHECKED BY: DWL
SCALE: NONE
PROJECT NUMBER: N/A

CONSTRUCTION STANDARDS
PRIMARY AND SECONDARY ARTERIAL
STREET DETAILS

SHEET NO.	TOTAL SHEETS
02	43

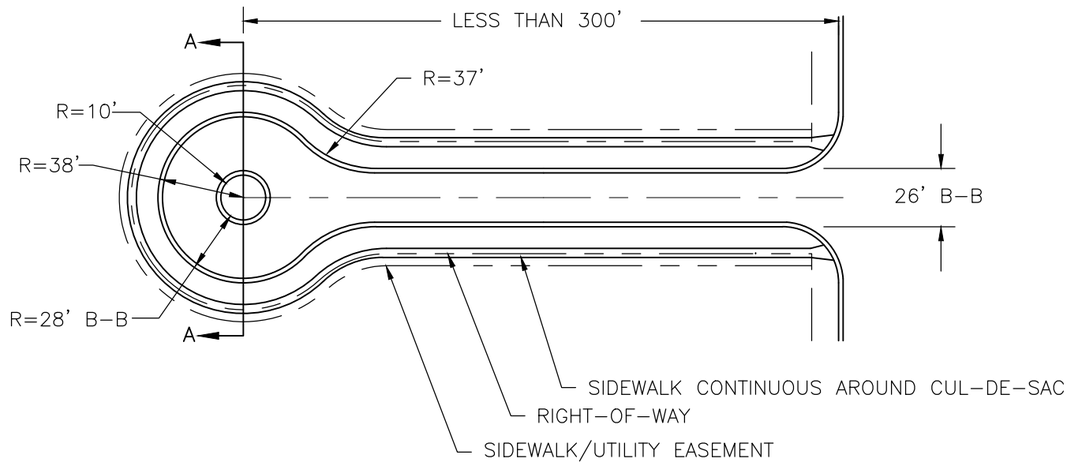

PLAN 1

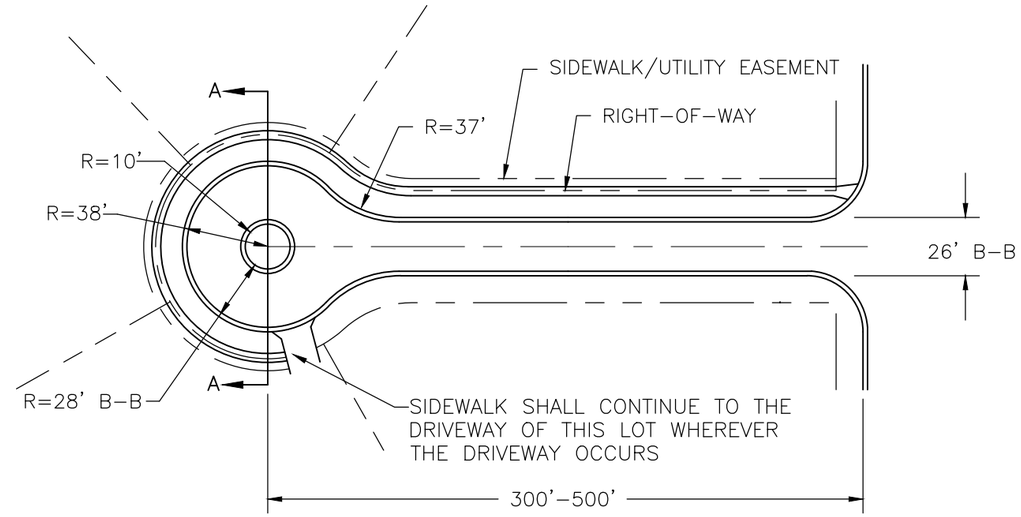

PLAN 2

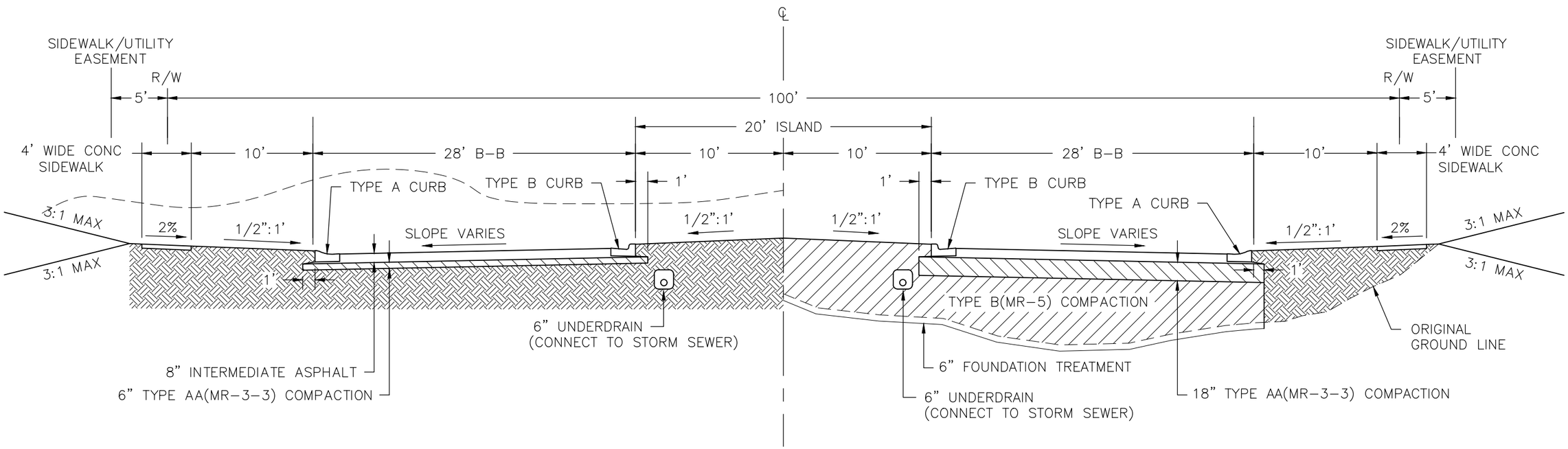

SECTION A-A

CUT SECTION

FILL SECTION

RESIDENTIAL CUL-DE-SAC

DRAWING: K:\LEAWOOD STANDARDS\CONSTRUCTION\CUL-DE-SAC DETAILS.DWG

City of Leawood

		ENGINEERING SERVICES: DIVISION OF DESIGN DEPARTMENT OF PUBLIC WORKS	
		SURVEYING SERVICES: DIVISION OF DESIGN DEPARTMENT OF PUBLIC WORKS	
	NOV 14	MRS	DECREASED ISLAND WIDTH TO 20'
	DATE	BY	REVISIONS

DATE: DECEMBER 2010
DESIGNED BY: DWL
DRAWN BY: MRS
CHECKED BY: DWL
SCALE: NONE
PROJECT NUMBER: N/A

CONSTRUCTION STANDARDS
RESIDENTIAL CUL-DE-SAC DETAILS

SHEET NO.	TOTAL SHEETS
03	43

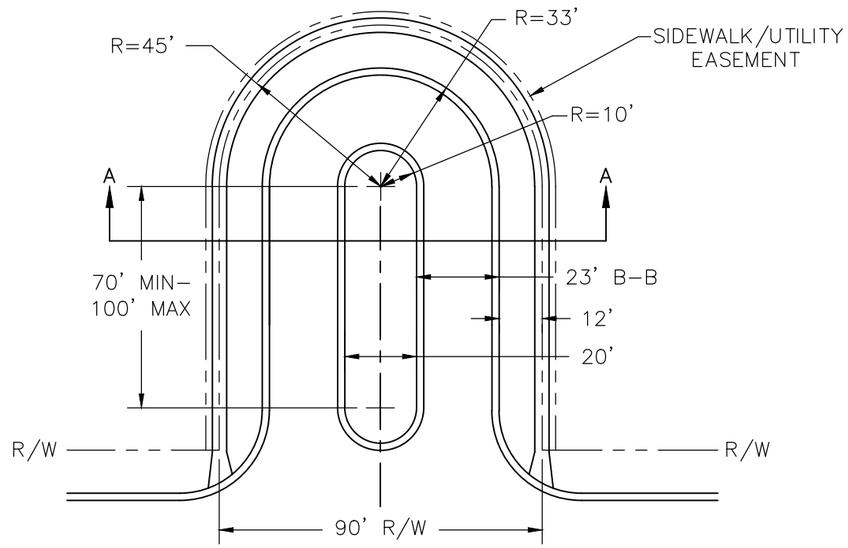

PLAN

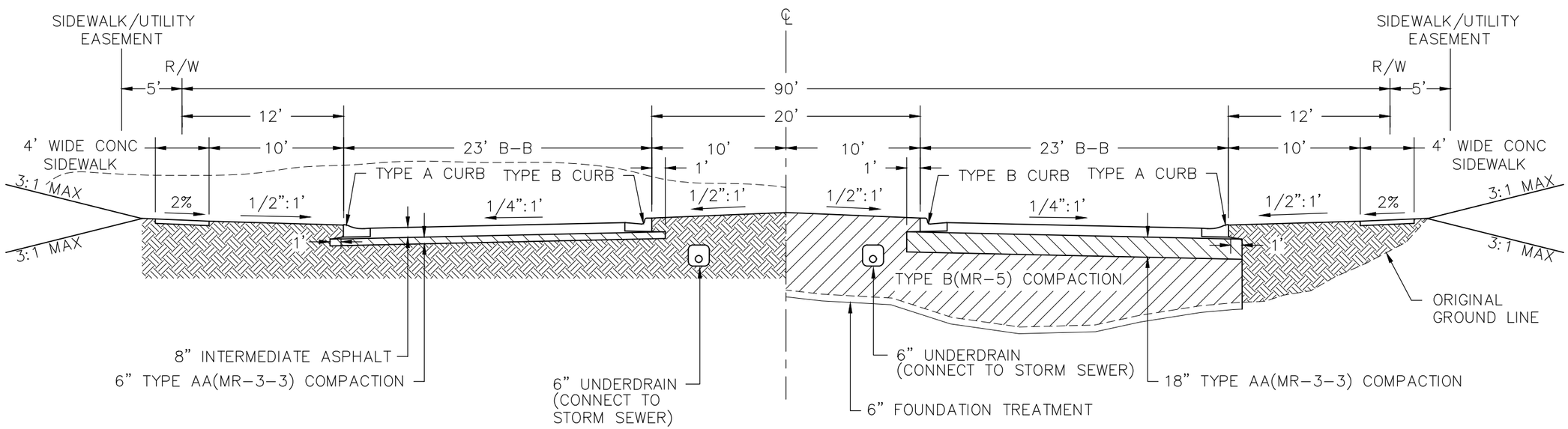

SECTION A–A

CUT SECTION

FILL SECTION

RESIDIENTIAL U–DRIVE

DRAWING: K:\LEAWOOD STANDARDS\CONSTRUCTION\U-DRIVE DETAILS.DWG

City of Leawood

ENGINEERING SERVICES:
DIVISION OF DESIGN
DEPARTMENT OF PUBLIC WORKS
SURVEYING SERVICES:
DIVISION OF DESIGN
DEPARTMENT OF PUBLIC WORKS

DATE	BY	REVISIONS

DATE: DECEMBER 2010
DESIGNED BY: DWL
DRAWN BY: MRS
CHECKED BY: DWL
SCALE: NONE
PROJECT NUMBER: N/A

CONSTRUCTION STANDARDS
U–DRIVE DETAILS

SHEET NO.	TOTAL SHEETS
04	43

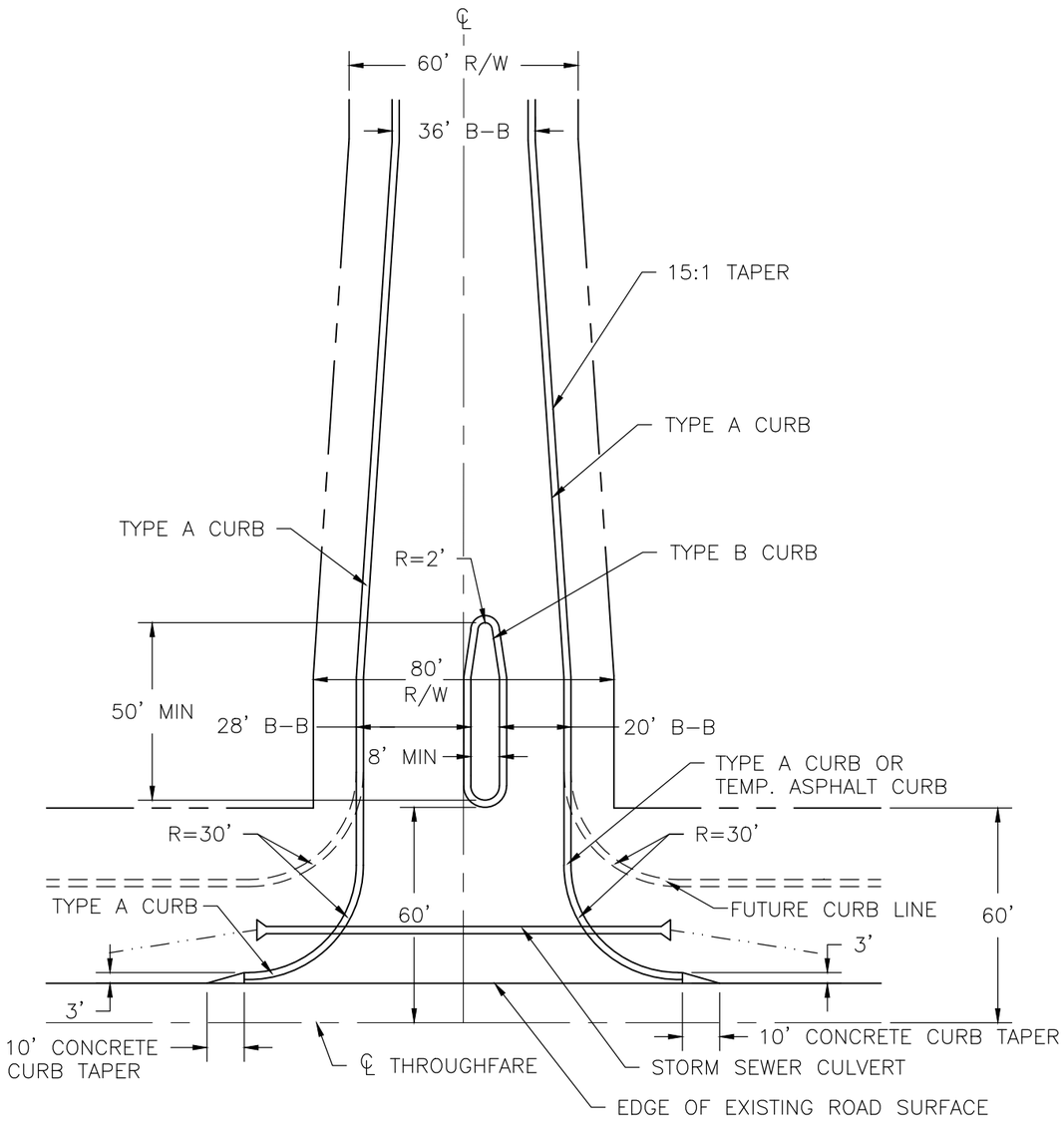

COLLECTOR STREET AT THROUGHFARE

MEDIAN DETAILS

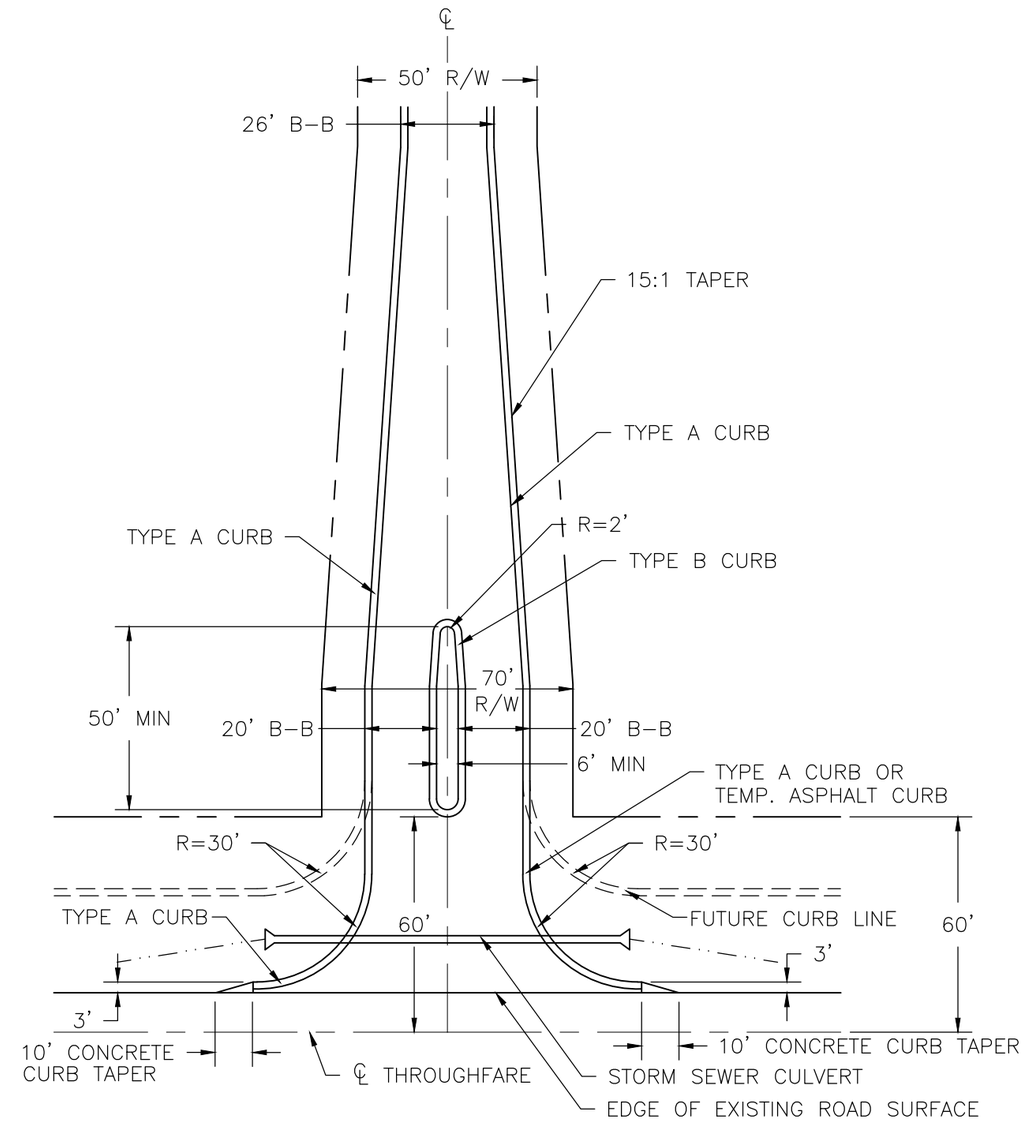

LOCAL STREET AT THROUGHFARE

MEDIAN DETAILS

THIS DEPARTMENT NEITHER REQUIRES NOR RECOMMENDS THE USE OF MEDIANS IN THESE SITUATIONS; HOWEVER, IF A MEDIAN IS USED, THESE DETAILS SHOULD BE FOLLOWED

DRAWING: K:\LEAWOOD STANDARDS\CONSTRUCTION\MEDIAN.DWG

City of Leawood

ENGINEERING SERVICES:
DIVISION OF DESIGN
DEPARTMENT OF PUBLIC WORKS
SURVEYING SERVICES:
DIVISION OF DESIGN
DEPARTMENT OF PUBLIC WORKS

DATE	BY	REVISIONS

DATE: DECEMBER 2010
DESIGNED BY: DWL
DRAWN BY: MRS
CHECKED BY: DWL
SCALE: NONE
PROJECT NUMBER: N/A

CONSTRUCTION STANDARDS
MEDIAN DETAILS

SHEET NO.	TOTAL SHEETS
05	43

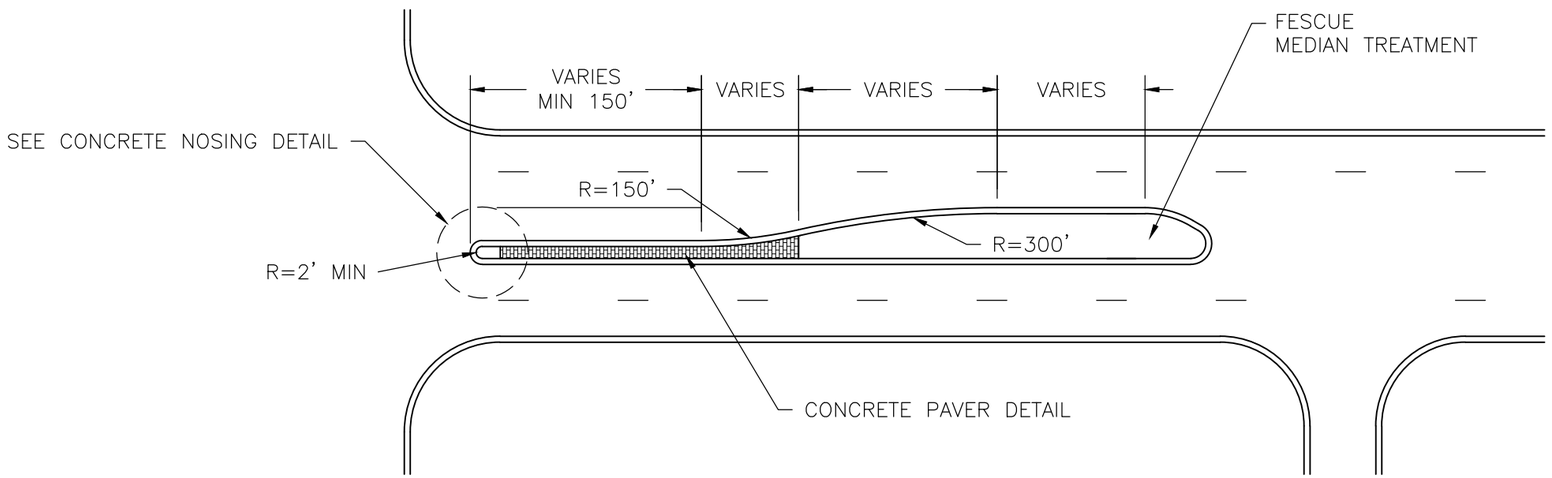

PLAN

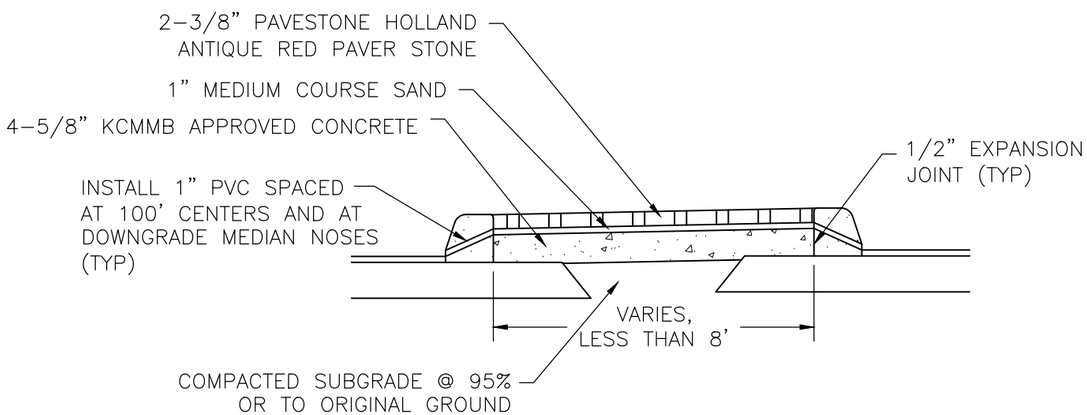

PAVING BRICK DETAIL

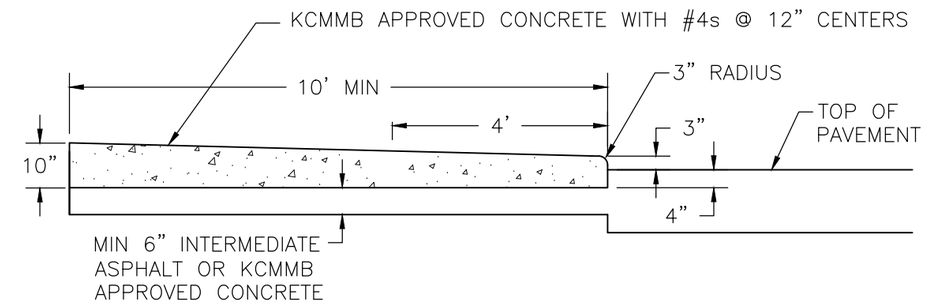

CONCRETE NOSING DETAIL

MEDIAN DETAILS

DRAWING: K:\LEAWOOD STANDARDS\CONSTRUCTION\TYPICAL MEDIAN DETAIL.DWG

City of Leawood

ENGINEERING SERVICES:
DIVISION OF DESIGN
DEPARTMENT OF PUBLIC WORKS
SURVEYING SERVICES:
DIVISION OF DESIGN
DEPARTMENT OF PUBLIC WORKS

DATE	BY	REVISIONS

DATE: DECEMBER 2010
DESIGNED BY: DWL
DRAWN BY: MRS
CHECKED BY: DWL
SCALE: NONE
PROJECT NUMBER: N/A

CONSTRUCTION STANDARDS
TYPICAL MEDIAN DETAILS

SHEET NO.	TOTAL SHEETS
06	43

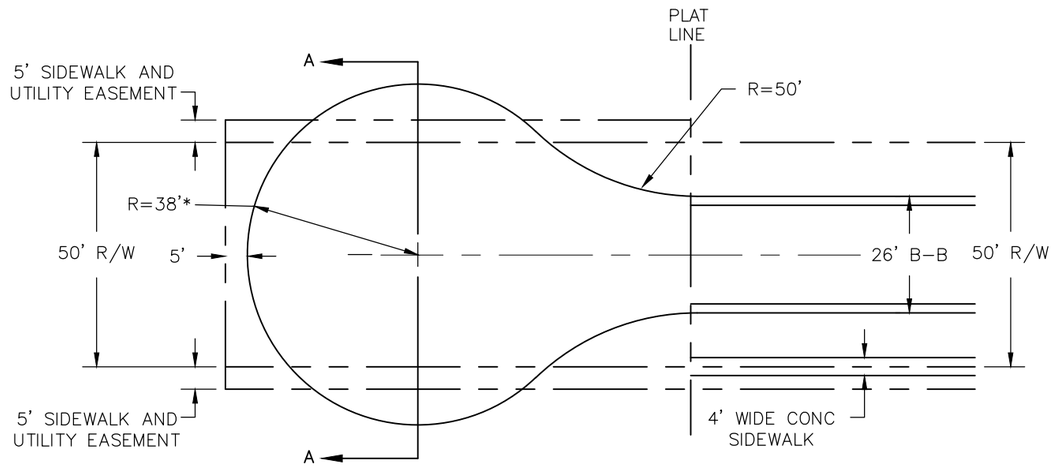

PLAN

*A SMALLER RADIUS MAY BE APPROVED BY THE FIRE MARSHALL

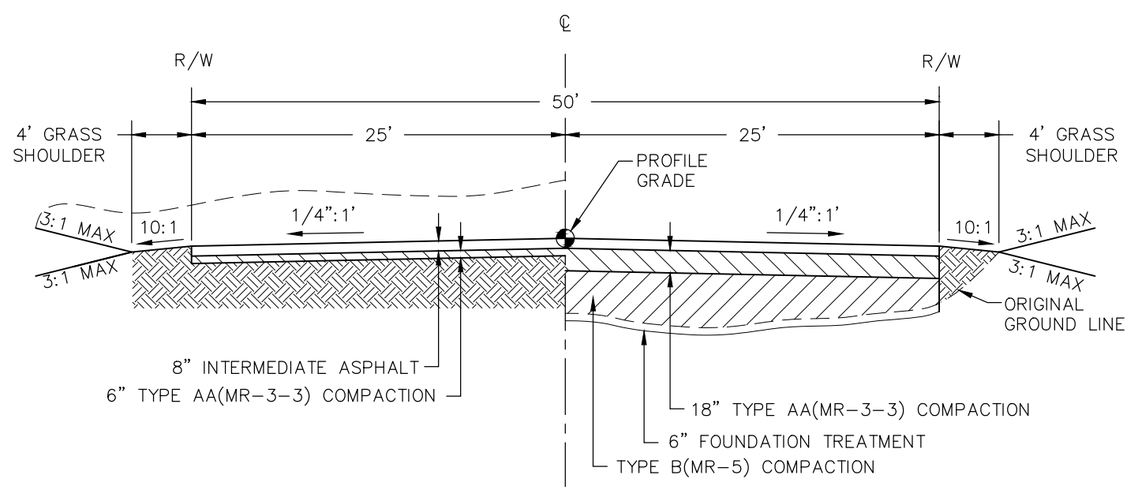

SECTION A–A

CUT SECTION

FILL SECTION

TEMPORARY CUL–DE–SAC

DRAWING: K:\LEAWOOD STANDARDS\CONSTRUCTION\TEMPORARY CUL-DE-SAC DETAILS.DWG

City of Leawood

ENGINEERING SERVICES:
DIVISION OF DESIGN
DEPARTMENT OF PUBLIC WORKS
SURVEYING SERVICES:
DIVISION OF DESIGN
DEPARTMENT OF PUBLIC WORKS

DATE	BY	REVISIONS

DATE: DECEMBER 2010
DESIGNED BY: DWL
DRAWN BY: MS
CHECKED BY: DWL
SCALE: NONE
PROJECT NUMBER: N/A

CONSTRUCTION STANDARDS
TEMPORARY CUL-DE-SAC DETAILS

SHEET NO. 07
TOTAL SHEETS 43

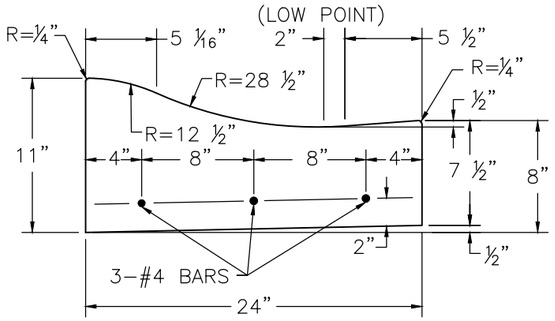

TYPE A CURB

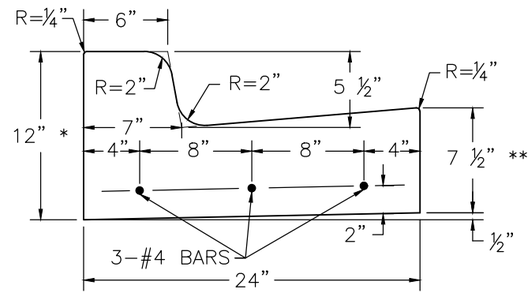

TYPE B CURB

* 10-1/2" FOR PRIMARY COLLECTOR OR ARTERIAL IF SET ON ASPHALT BASE

** 6" FOR PRIMARY COLLECTOR OR ARTERIAL IF SET ON ASPHALT BASE

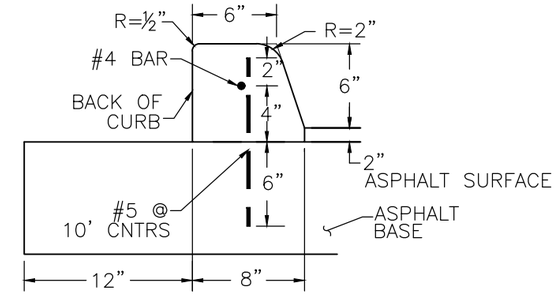

TYPE C CURB

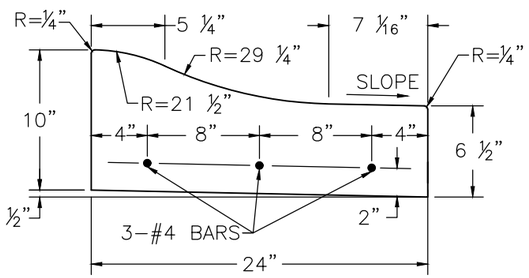

TYPE A DRY CURB

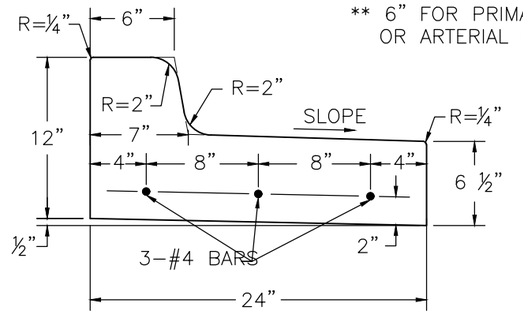

TYPE B DRY CURB

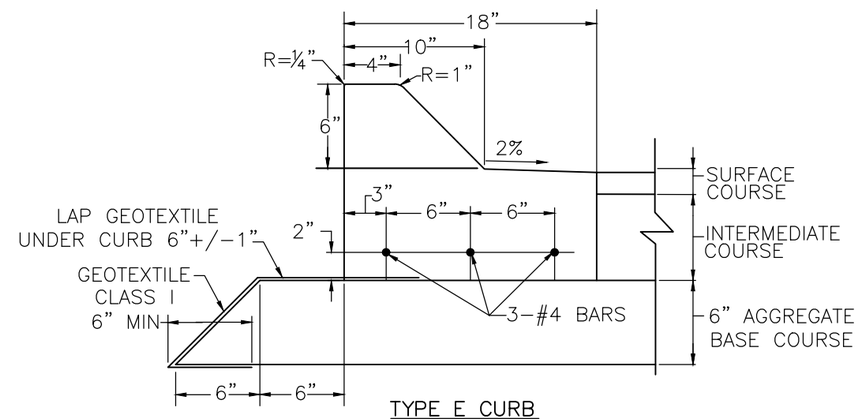

TYPE E CURB

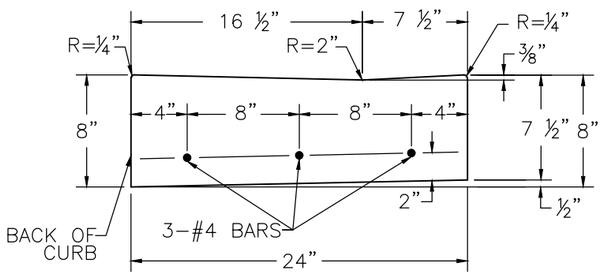

SIDEWALK RAMP CURB
(USE WITH TYPE A CURB)

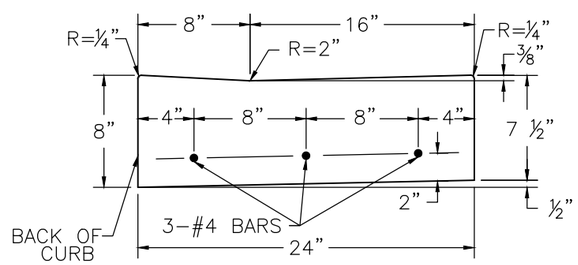

SIDEWALK RAMP CURB
(USE WITH TYPE B CURB)

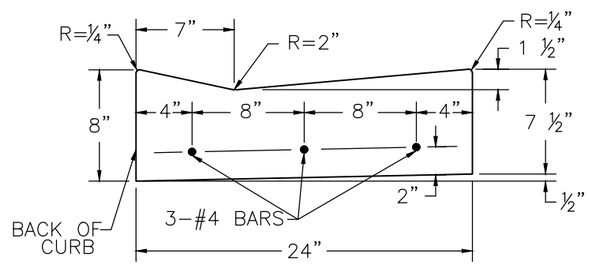

TYPE D CURB

SHALL ONLY BE FOR USE ON STREETS WITH TYPE B CURB AND GUTTER. ON STREETS WITH TYPE A CURB AND GUTTER, THE TYPE A CURB AND GUTTER WILL BE MAINTAINED THROUGH THE DRIVEWAY.

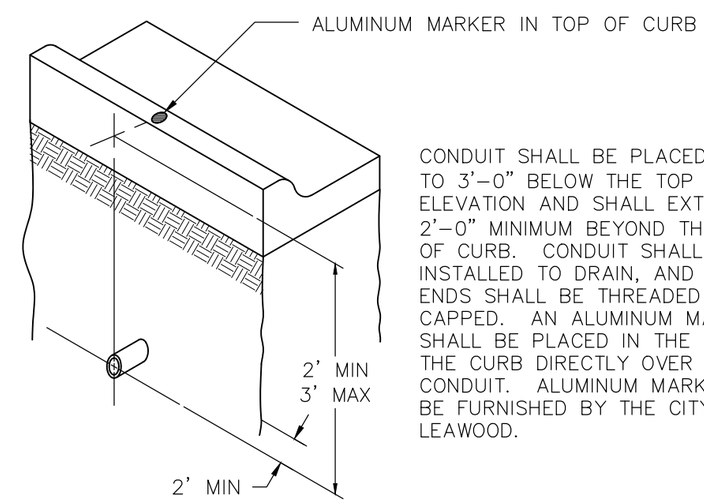

CONDUIT SHALL BE PLACED 2'-0" TO 3'-0" BELOW THE TOP OF CURB ELEVATION AND SHALL EXTEND 2'-0" MINIMUM BEYOND THE BACK OF CURB. CONDUIT SHALL BE INSTALLED TO DRAIN, AND ALL ENDS SHALL BE THREADED AND CAPPED. AN ALUMINUM MARKER SHALL BE PLACED IN THE TOP OF THE CURB DIRECTLY OVER THE CONDUIT. ALUMINUM MARKERS WILL BE FURNISHED BY THE CITY OF LEAWOOD.

CONDUIT MARKING DETAIL

NOTES

1. 1/2" PREMOLDED EXPANSION JOINTS SHALL BE PLACED AT POINTS OF CURVATURE, CURB RETURNS, CURB INLETS, AND AT 250' CENTERS. CONTRACTION JOINTS SHALL BE 2" DEEP, AND PLACED AT 15' INTERVALS EQUALLY SPACED BETWEEN EXPANSION JOINTS. KCMMB APPROVED CONCRETE SHALL BE USED THROUGHOUT UNLESS OTHERWISE NOTED.
2. STEEL REINFORCEMENT MAY BE OMITTED FROM CURB PLACED ON A MINIMUM OF 4" BASE ASPHALT.
3. SEE SIDEWALK RAMP DETAILS FOR TYPICAL SIDEWALK RAMP CURB AND GUTTER SECTIONS.
4. ANY CURB LENGTH GREATER THAN 100' SHALL BE MACHINE PLACED, SHORTER SEGMENTS MAY BE HAND PLACED.
5. LAP SPLICE SHALL MATCH KDOT REQUIREMENTS.

DRAWING: K:\LEAWOOD STANDARDS\CONSTRUCTION\RESIDENTIAL DRIVEWAY.DWG

City of Leawood

ENGINEERING SERVICES:
DIVISION OF DESIGN
DEPARTMENT OF PUBLIC WORKS
SURVEYING SERVICES:
DIVISION OF DESIGN
DEPARTMENT OF PUBLIC WORKS

DATE	BY	REVISIONS

DATE: DECEMBER 2010
DESIGNED BY: DWL
DRAWN BY: MRS
CHECKED BY: DWL
SCALE: NONE
PROJECT NUMBER: N/A

CONSTRUCTION STANDARDS
CONCRETE CURB AND CONDUIT MARKER DETAILS

SHEET NO. 08 | TOTAL SHEETS 43

FOR PROPERTIES PLATTED IN OR BEFORE 2013

IF THE SIDEWALK COSS-SLOPE IS GREATER THAN 2% THE CONTRACTOR SHALL REMOVE AND REPLACE THE SIDEWALK PANEL ADJACENT TO THE DRIVEWAY AND TRANSITION FROM A 2% CROSS-SLOPE AT THE DRIVEWAY TO MATCH EXISTING CROSS-SLOPE ON THE SIDEWALK. CONTRACTOR SHALL MAINTAIN A 2% CROSS-SLOPE ACROSS THE DRIVEWAY IN THE LOCATION OF THE SIDEWALK.

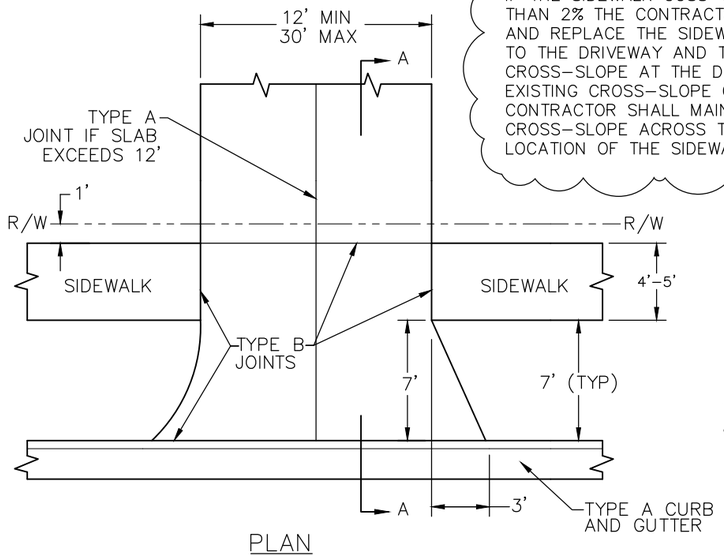

PLAN

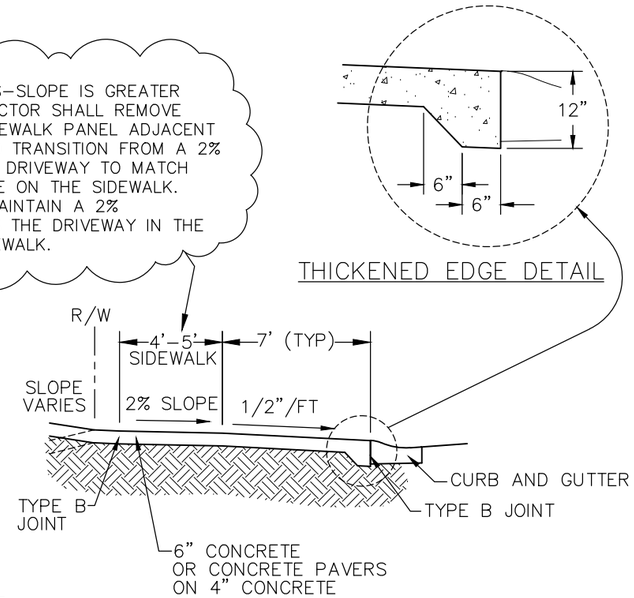

SECTION A-A

THICKENED EDGE DETAIL

FOR RECONSTRUCTION PROJECTS ONLY

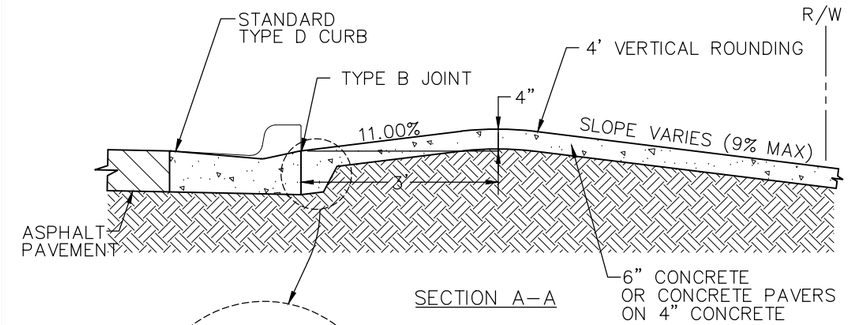

SECTION A-A

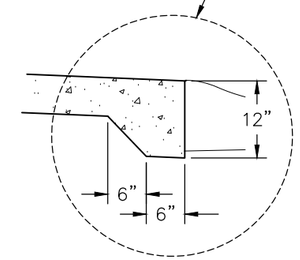

THICKENED EDGE DETAIL

FOR PROPERTIES PLATTED AFTER 2013

IF THE SIDEWALK COSS-SLOPE IS GREATER THAN 2% THE CONTRACTOR SHALL REMOVE AND REPLACE THE SIDEWALK PANEL ADJACENT TO THE DRIVEWAY AND TRANSITION FROM A 2% CROSS-SLOPE AT THE DRIVEWAY TO MATCH EXISTING CROSS-SLOPE ON THE SIDEWALK. CONTRACTOR SHALL MAINTAIN A 2% CROSS-SLOPE ACROSS THE DRIVEWAY IN THE LOCATION OF THE SIDEWALK.

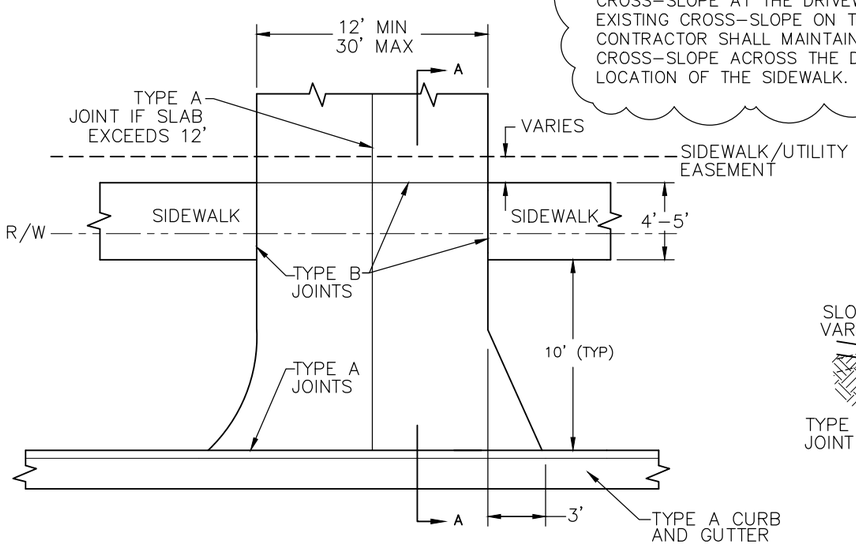

PLAN

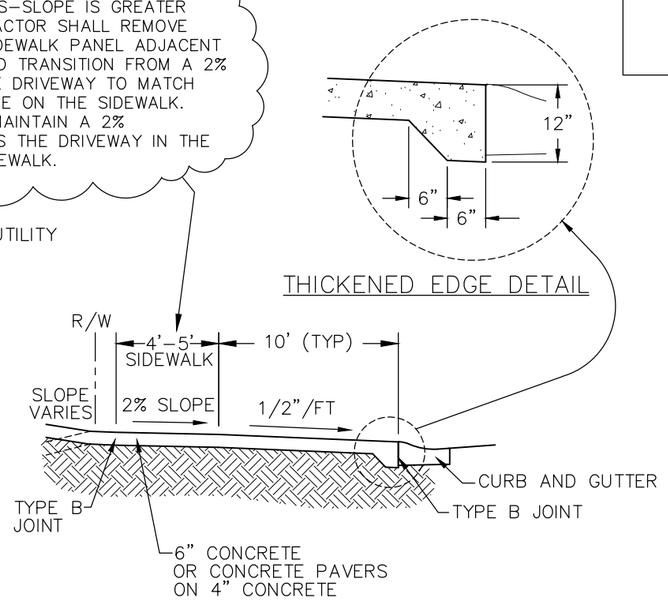

SECTION A-A

THICKENED EDGE DETAIL

NOTES (FOR ALL DRIVEWAYS)

1. USE KCMMB APPROVED CONCRETE THROUGHOUT.
2. EXISTING DIRECT BURIED STREET LIGHT CABLE MAY BE LEFT IN PLACE, UNLESS DAMAGED BY CONSTRUCTION. IF STREET LIGHT CABLE IS CUT, THE CONTRACTOR SHALL REPLACE STREET LIGHT CABLE BETWEEN ADJACENT STREET LIGHTS.
3. REINFORCING STEEL IS NOT REQUIRED, HOWEVER, IF IT IS USED IT MAY NOT CROSS THE EXPANSION (TYPE B) JOINT.
4. DO NOT SCALE THESE DRAWINGS FOR DIMENSIONS. ANY QUESTIONS REGARDING DIMENSIONS SHALL BE BROUGHT TO THE ATTENTION OF THE CITY ENGINEER PRIOR TO CONSTRUCTION.
5. FOR CONCRETE PAVERS OR ASPHALT SURFACE, DRIVE THICKNESS MAY BE REDUCED TO 4" BUT MUST MAINTAIN A THICKENED EDGE.

City of Lynnwood

ENGINEERING SERVICES:
DIVISION OF DESIGN
DEPARTMENT OF PUBLIC WORKS
SURVEYING SERVICES:
DIVISION OF DESIGN
DEPARTMENT OF PUBLIC WORKS

DATE	BY	REVISIONS

DATE: DECEMBER 2010
DESIGNED BY: DWL
DRAWN BY: HKS
CHECKED BY: DWL
SCALE: NONE
PROJECT NUMBER: N/A

CONSTRUCTION STANDARDS
RESIDENTIAL DRIVEWAY DETAILS

SHEET NO. 09 | TOTAL SHEETS 43

DRAWING: K:\LEAWOOD STANDARDS\CONSTRUCTION\RESIDENTIAL DRIVEWAY.DWG

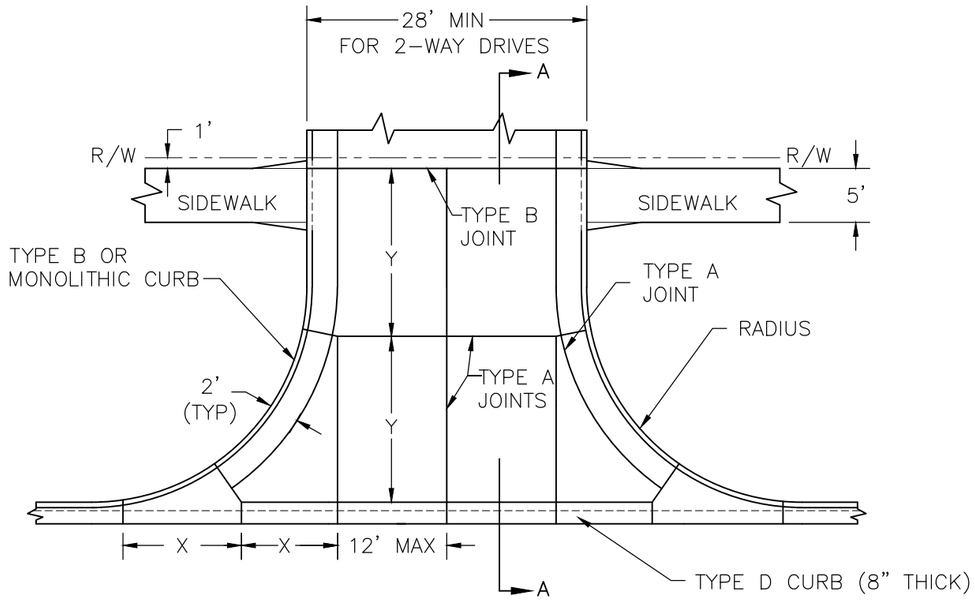

RADIUS	X	Y
20	11'-0"	10'-0"
25	9'-0"	12'-6"
30	10'-8"	10'-0"

PLAN

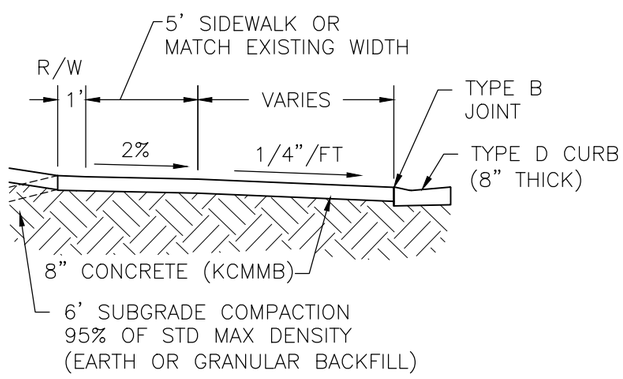

SECTION A-A

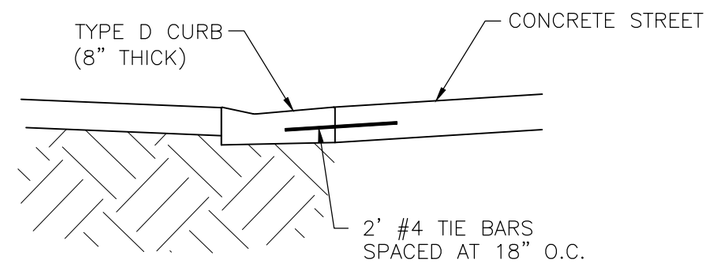

CONCRETE STREET TIE-IN

NOTES

1. USE KCMMB APPROVED CONCRETE THROUGHOUT.
2. AN ALUMINUM MARKER SHALL BE INSTALLED ON BOTH SIDES OF A COMMERCIAL ENTRANCE TO LOCATE ELECTRICAL CONDUIT. SEE CONDUIT MARKING DETAIL.
3. IF STREET LIGHT CABLE IS CUT, THE CONTRACTOR SHALL REPLACE STREET LIGHT CABLE BETWEEN ADJACENT STREET LIGHTS.
4. IF THE DRIVEWAY ABUTS A CONCRETE STREET, THE CURB SHALL BE TIED INTO THE STREET WITH 2' #4 TIE BARS SPACED AT 18"

COMMERCIAL AND INDUSTRIAL DRIVE

DRAWING: K:\LEAWOOD STANDARDS\CONSTRUCTION\COMMERCIAL DRIVEWAY.DWG

City of Leawood

ENGINEERING SERVICES:
DIVISION OF DESIGN
DEPARTMENT OF PUBLIC WORKS
SURVEYING SERVICES:
DIVISION OF DESIGN
DEPARTMENT OF PUBLIC WORKS

REVISIONS	BY	DATE

DATE: DECEMBER 2010
DESIGNED BY: DWL
DRAWN BY: MRS
CHECKED BY: DWL
SCALE: NONE
PROJECT NUMBER: N/A

CONSTRUCTION STANDARDS
COMMERCIAL AND INDUSTRIAL DRIVEWAY DETAILS

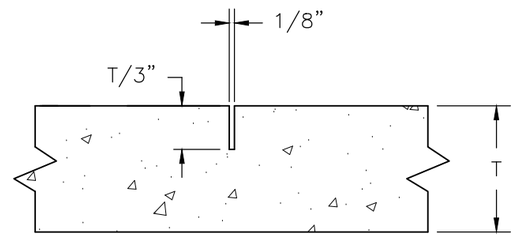

TYPE A JOINT

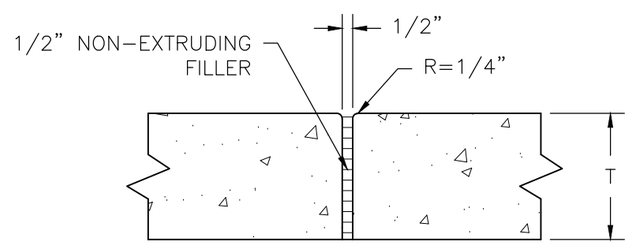

TYPE B JOINT

DRAWING: K:\LEAWOOD STANDARDS\CONSTRUCTION\JOINT DETAIL.DWG

City of Leawood

ENGINEERING SERVICES:
DIVISION OF DESIGN
DEPARTMENT OF PUBLIC WORKS
SURVEYING SERVICES:
DIVISION OF DESIGN
DEPARTMENT OF PUBLIC WORKS

DATE	BY	REVISIONS

DATE: DECEMBER 2010
DESIGNED BY: DWL
DRAWN BY: MRS
CHECKED BY: DWL
SCALE: NONE
PROJECT NUMBER: N/A

CONSTRUCTION STANDARDS
JOINT DETAILS

SHEET NO. 11
TOTAL SHEETS 43

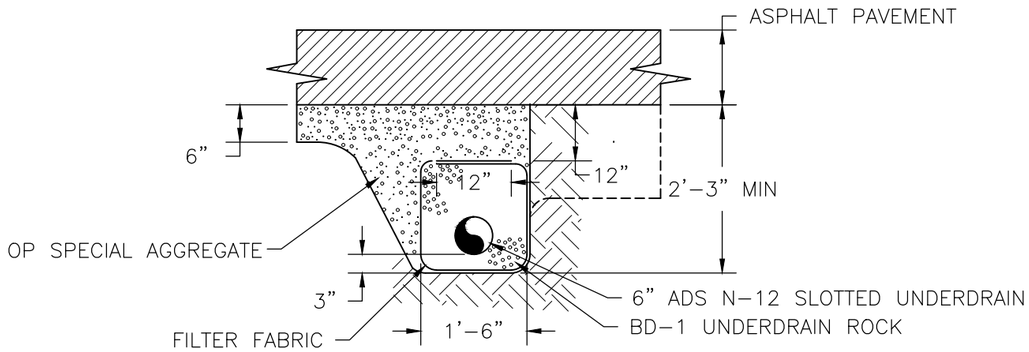

BLANKET UNDERDRAIN

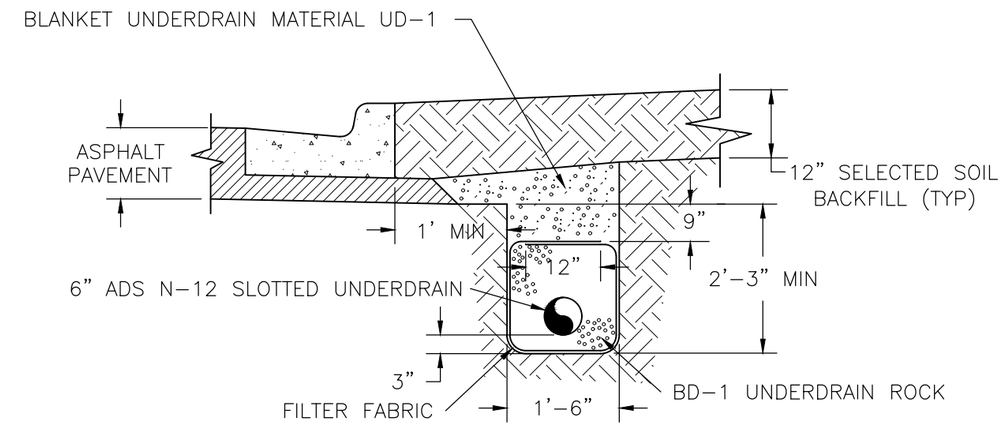

PIPE UNDERDRAIN

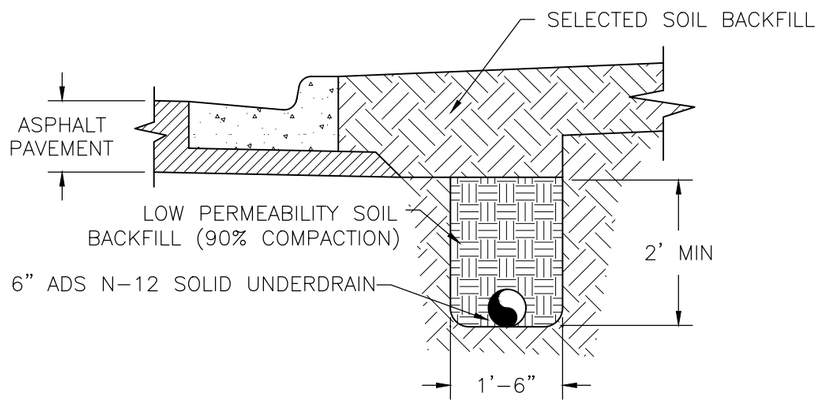

OUTLET PIPE

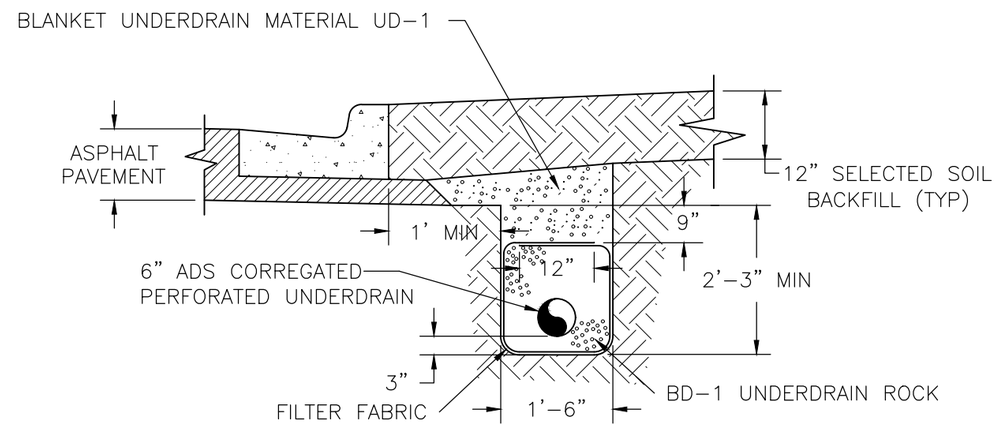

PIPE UNDERDRAIN

(ON RADIUS SECTIONS OF CURBS WHERE R>50')

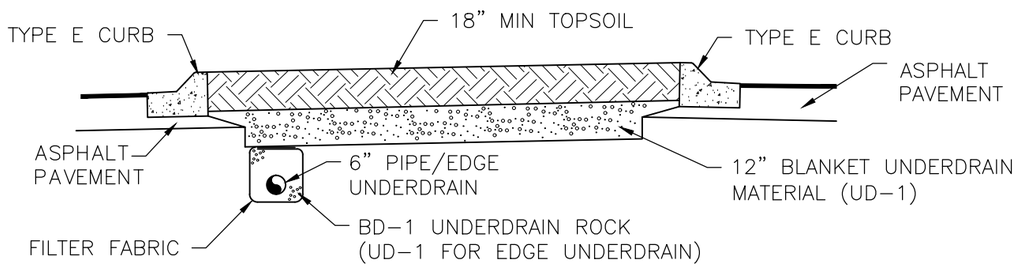

UNDERDRAIN AT MEDIAN NOSE

City of Leawood

ENGINEERING SERVICES:
DIVISION OF DESIGN
DEPARTMENT OF PUBLIC WORKS
SURVEYING SERVICES:
DIVISION OF DESIGN
DEPARTMENT OF PUBLIC WORKS

DATE	BY	REVISIONS

DATE: DECEMBER 2010
DESIGNED BY: DWL
DRAWN BY: MS
CHECKED BY: DWL
SCALE: NONE
PROJECT NUMBER: N/A

CONSTRUCTION STANDARDS
UNDERDRAIN DETAILS

SHEET NO. 12 | TOTAL SHEETS 43

DRAWING: K:\LEAWOOD STANDARDS\CONSTRUCTION\UNDERDRAIN.DWG

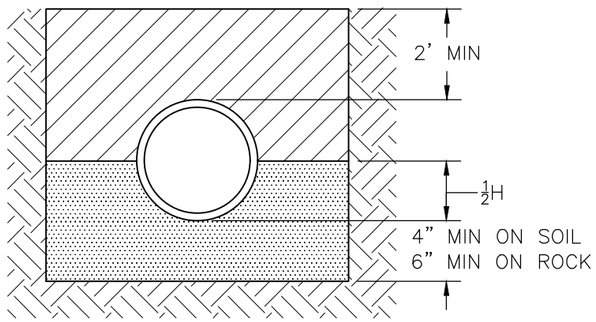

OUTSIDE OF RIGHT-OF-WAY BEDDING DETAIL

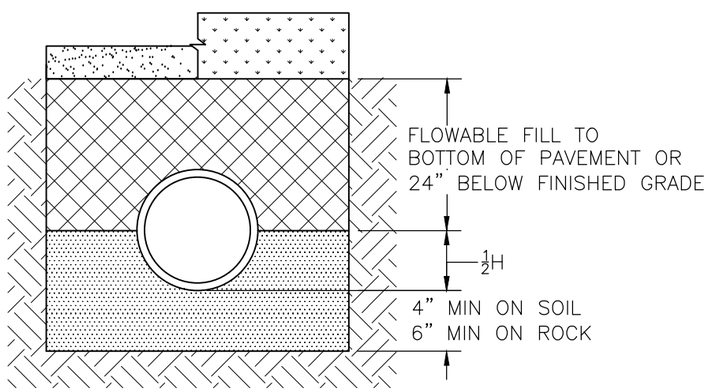

RIGHT-OF-WAY BEDDING DETAIL

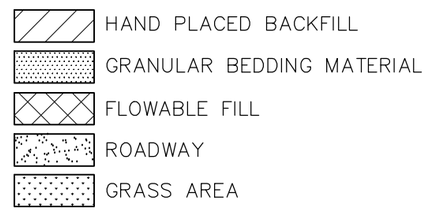

NOTES
1. GRANULAR FILL TO BE CRUSHED STONE OR PEA GRAVEL WITH NOT LESS THAN 95% PASSING 1/2" AND NOT LESS THAN 95% TO BE RETAINED ON A #8; TO BE PLACED IN NO MORE THAN 6 LAYERS.
2. TAMPED BACKFILL SHALL BE FINELY DIVIDED, JOB EXCAVATED MATERIAL FREE FROM DEBRIS, ORGANIC MATERIAL, AND STONES COMPACTED TO 95% MAXIMUM DENSITY AS DETERMINED BY AASHTO STANDARD, METHOD T-99. GRANULAR FILL MAY BE SUBSTITUTED FOR ALL OR PART OF TAMPED BACKFILL.
3. HAND-PLACE BACKFILL SHALL BE FINELY DIVIDED MATERIAL FREE FROM DEBRIS AND STONE.

TRENCHING DETAILS

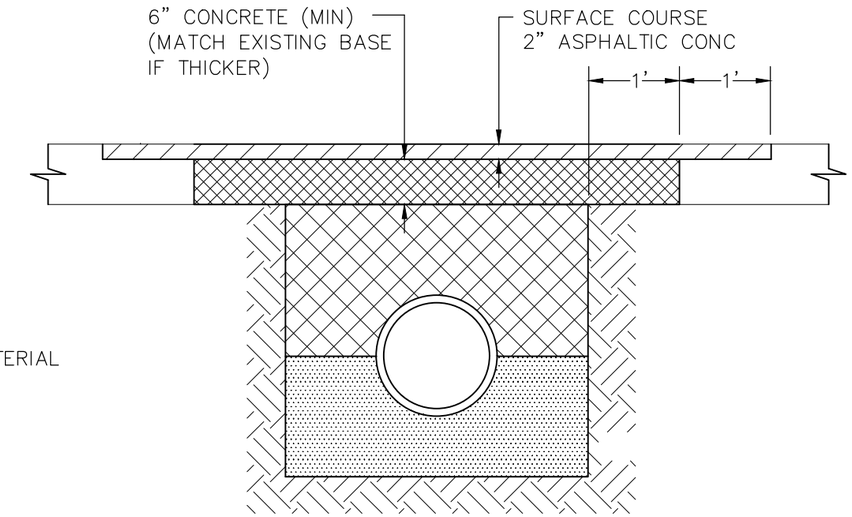

STREET CUT RESTORATION DETAIL

NOTES
1. ASPHALT MAY BE USED WITH THE APPROVAL OF THE CITY ENGINEER.
2. ON CONCRETE STREETS, PAVEMENT PATCH SHALL INCLUDE ENTIRE PANELS. DOWELS SHALL BE INSTALLED PER CITY ENGINEER

TRENCH WIDTH TABLE

PIPE DIAMETER (INCHES)	MINIMUM SIDE WALL CLEARANCE (INCHES)
15-30	14
33-42	16
48-60	18
66-108	28

DRAWING: K:\LEAWOOD STANDARDS\CONSTRUCTION\RESIDENTIAL DRIVEWAY.DWG

City of Leawood

ENGINEERING SERVICES: DIVISION OF DESIGN DEPARTMENT OF PUBLIC WORKS
SURVEYING SERVICES: DIVISION OF DESIGN DEPARTMENT OF PUBLIC WORKS

CAST IRON DETECTABLE WARNING PANELS ONLY	5/10/18	MRS
REVISIONS	DATE	BY

DATE: DECEMBER 2010
DESIGNED BY: DWL
DRAWN BY: MRS
CHECKED BY: DWL
SCALE: NONE
PROJECT NUMBER: N/A

CONSTRUCTION STANDARDS
TRENCHING AND RESTORATION DETAILS

SHEET NO. 13 | TOTAL SHEETS 43

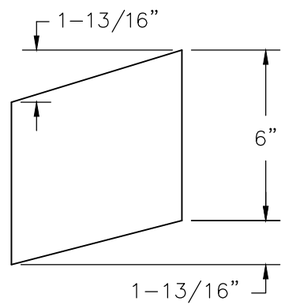

STIFFENER

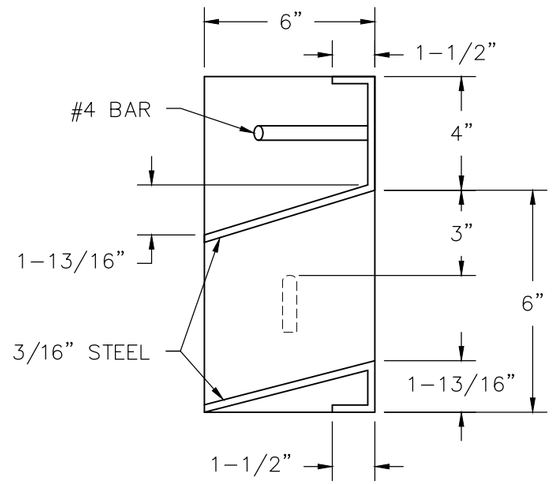

SECTION A-A

6" STEEL INLET FRAME

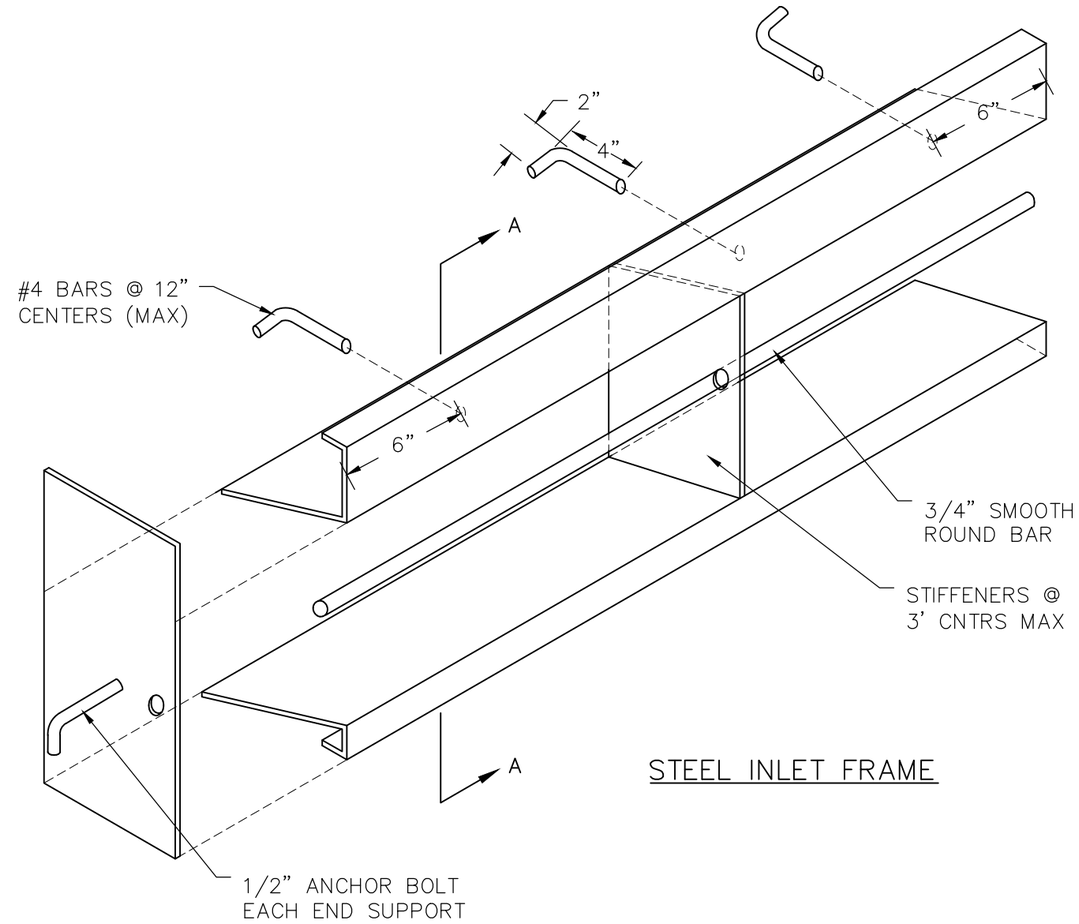

STEEL INLET FRAME

NOTES

1. ALL WELDS SHALL BE PERFORMED IN ACCORDANCE WITH APPROPRIATE AWS SPECIFICATIONS AND PROCEDURES
2. ALL WELDS ON EXPOSED SURFACES SHALL BE DRESSED SO AS TO PROVIDE A PLEASING FINISHED APPEARANCE.
3. THE ENTIRE FRAME SHALL BE HOT DIP ZINC COATED IN ACCORDANCE WITH ASTM A-123.

DRAWING: K:\LEAWOOD STANDARDS\CONSTRUCTION\STEEL INLET FRAME.DWG

City of Leawood

ENGINEERING SERVICES:
DIVISION OF DESIGN
DEPARTMENT OF PUBLIC WORKS
SURVEYING SERVICES:
DIVISION OF DESIGN
DEPARTMENT OF PUBLIC WORKS

DATE	BY	REVISIONS

DATE: DECEMBER 2010
DESIGNED BY: DWL
DRAWN BY: MRS
CHECKED BY: DWL
SCALE: NONE
PROJECT NUMBER: N/A

CONSTRUCTION STANDARDS
6" STEEL INLET FRAME DETAILS

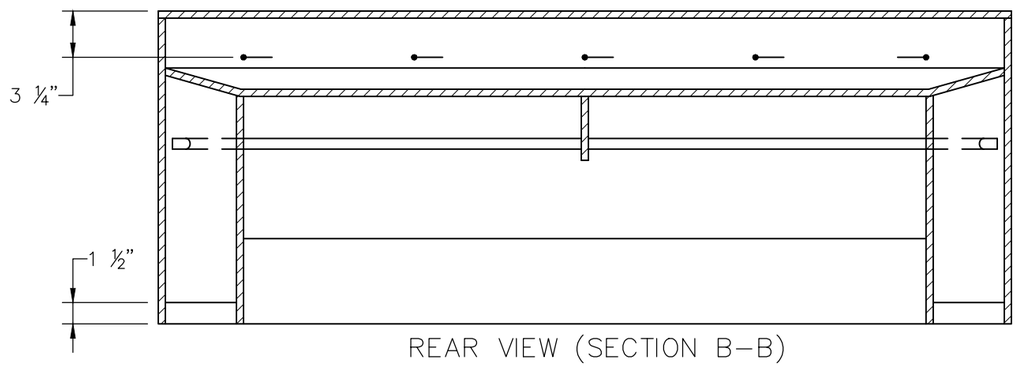

REAR VIEW (SECTION B–B)

NOT TO SCALE

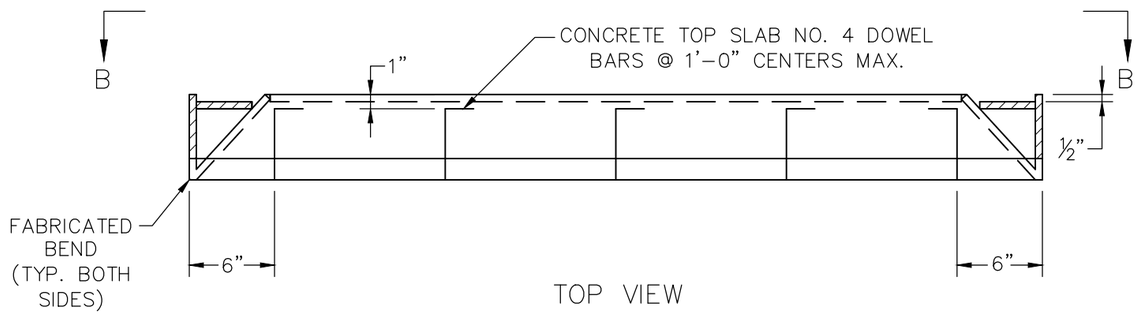

TOP VIEW

NOT TO SCALE

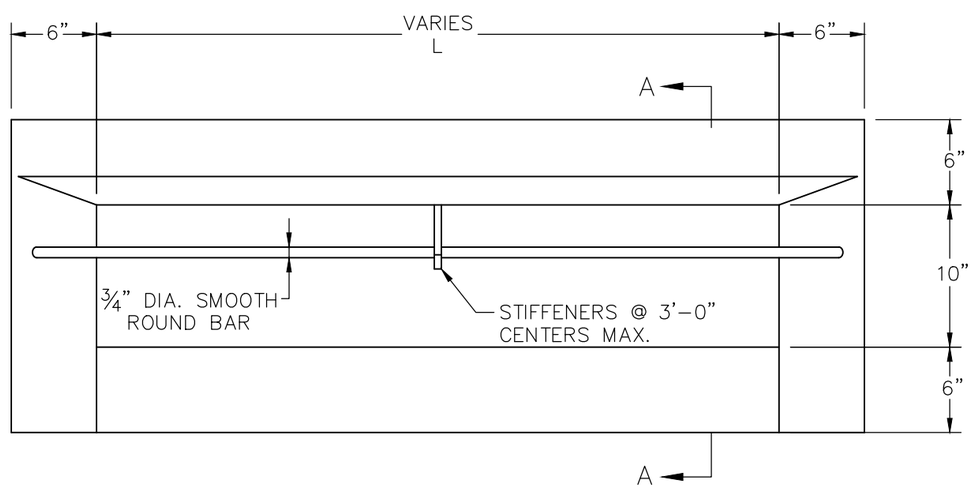

FRONT VIEW

NOT TO SCALE

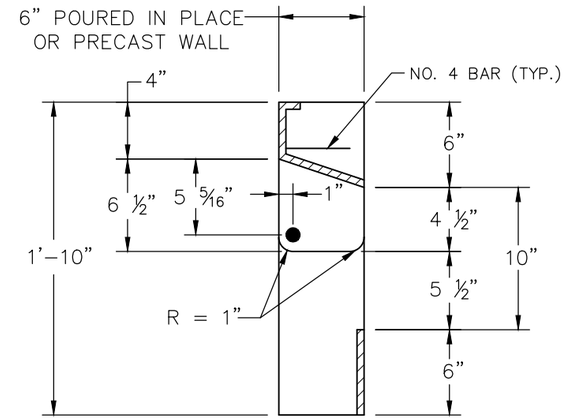

SIDE VIEW (SECTION A–A)

10" STEEL INLET FRAME
NOT TO SCALE

STEEL INLET FRAME NOTES

1. ALL WELDS SHALL BE PERFORMED IN ACCORDANCE WITH APPROPRIATE AWS SPECIFICATIONS AND PROCEDURES.
2. ALL STEEL SHALL BE 7 GAGE OR 3/16" THICK.
3. ALL WELDS ON EXPOSED SURFACES SHALL BE DRESSED SO AS TO PROVIDE A PLEASING FINISHED APPEARANCE.
4. THE ENTIRE FRAME SHALL BE HOT DIP ZINC COATED IN ACCORDANCE WITH ASTM A–123.
5. ROD AND STIFFENERS SHALL NOT BE INCLUDED IN 6" STEEL FRAME.

DRAWING: K:\LEAWOOD STANDARDS\CONSTRUCTION\STEEL INLET FRAME.DWG

City of Leawood

ENGINEERING SERVICES:
DIVISION OF DESIGN
DEPARTMENT OF PUBLIC WORKS

SURVEYING SERVICES:
DIVISION OF DESIGN
DEPARTMENT OF PUBLIC WORKS

REVISIONS	DATE	BY

DATE: DECEMBER 2010
DESIGNED BY: DWL
DRAWN BY: MRS
CHECKED BY: DWL
SCALE: NONE
PROJECT NUMBER: N/A

CONSTRUCTION STANDARDS
10" STEEL INLET FRAME DETAILS

SHEET NO. 15 | TOTAL SHEETS 43

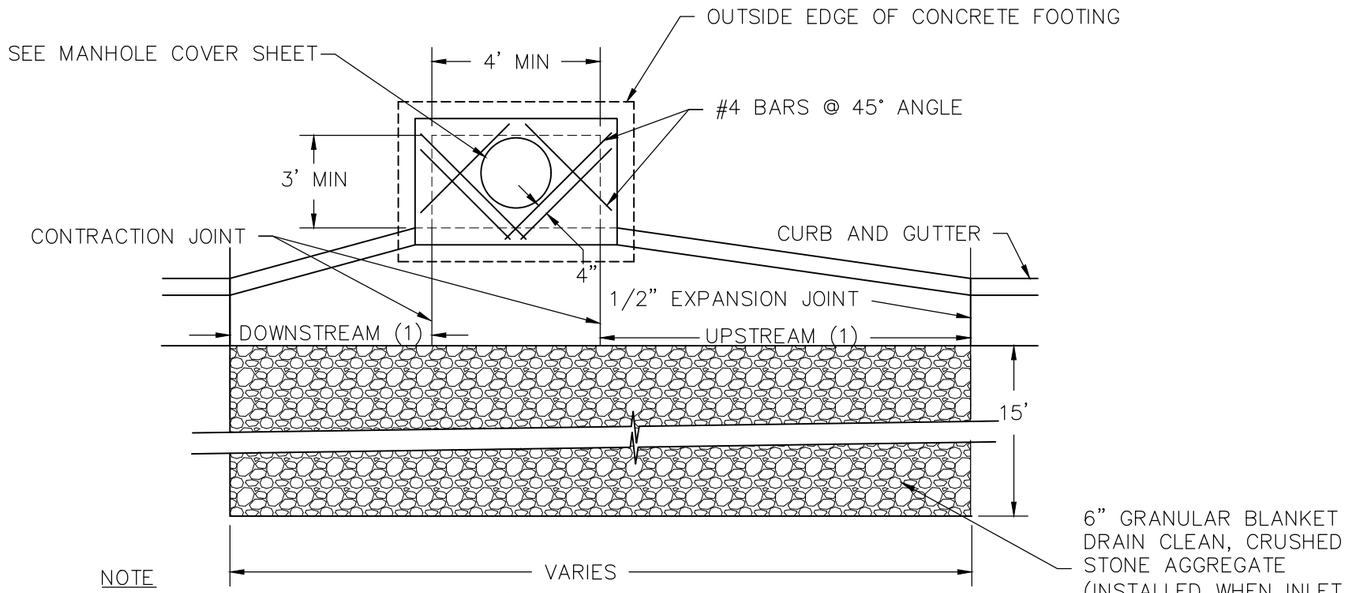

NOTE

1. 10' TRANSITION UPSTREAM SIDE, 5' TRANSITION DOWNSTREAM SIDE, EXCEPT:
   10' TRANSITION BOTH SIDES FOR SUMP INLET
   5' TRANSITION BOTH SIDES FOR SUMP INLET IN CUL-DE-SAC

PLAN VIEW

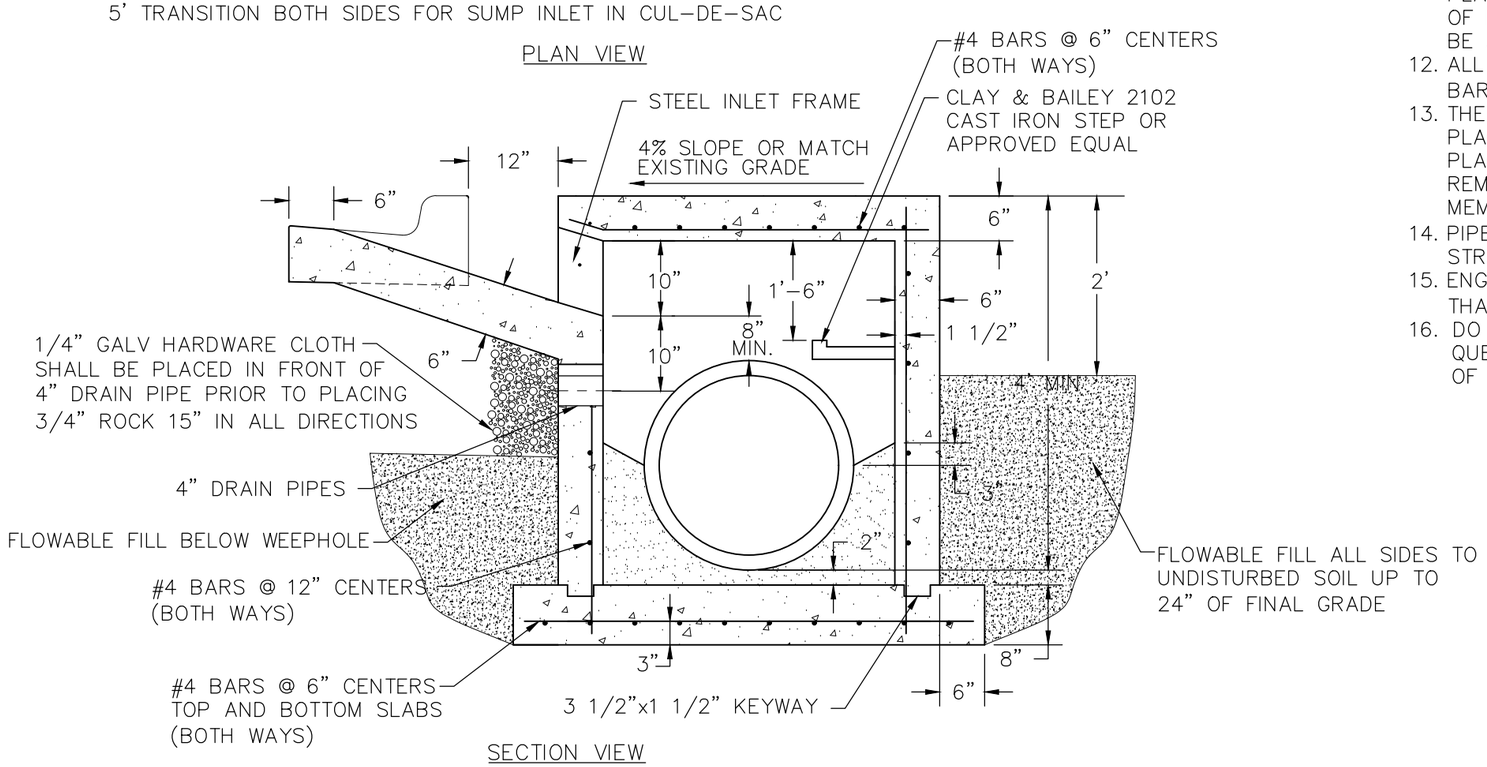

SECTION VIEW

CURB INLET DETAILS

NOTES

1. USE ONLY KCMMB APPROVED CONCRETE.
2. LIDS SHALL BE CAST IN PLACE USING KCMMB APPROVED CONCRETE.
3. INVERTS SHALL BE CONSTRUCTED USING KCMMB APPROVED CONCRETE.
4. THE FIRST DIMENSION LISTED IN THE CONSTRUCTION NOTES IS THE "L" DIMENSION. THE SECOND DIMENSION IS THE "W" DIMENSION.
5. CAST IRON STEPS SHALL BE SPACED AT 1'-4" ON CENTER VERTICALLY. THE DISTANCE FROM THE LAST STEP TO THE TOP OF THE CONCRETE INVERT SHOULD BE A MAXIMUM OF 24".
6. BEVEL ALL EXPOSED EDGES WITH 1/2" RADIUS TOOL
7. ON GRADE INLETS SHALL CONFORM TO THE STREET GRADE AND SUMP INLETS SHALL BE LEVEL.
8. REINFORCING STEEL SHALL BE NEW BILLET, MINIMUM GRADE 40 AS PER ASTM A615, AND SHALL BE BENT COLD.
9. ALL DIMENSIONS RELATIVE TO REINFORCING STEEL ARE TO CENTERLINE OF BARS. 2" CLEARANCE SHALL BE PROVIDED THROUGHOUT UNLESS OTHERWISE NOTED. TOLERANCE OF +/- 1/8" SHALL BE PERMITTED.
10. ALL LAP SPLICES NOT SHOWN SHALL BE A MINIMUM OF 40 BAR DIAMETERS IN LENGTH.
11. ALL DOWELS SHALL BE ACCURATELY PLACED AND SECURELY TIED IN PLACE PRIOR TO PLACEMENT OF BOTTOM SLAB CONCRETE. STICKING OF DOWELS INTO FRESH OR PARTIALLY HARDENED CONCRETE WILL NOT BE ACCEPTABLE.
12. ALL REINFORCING STEEL SHALL BE SUPPORTED ON FABRICATED STEEL BAR SUPPORTS AT 3' MAXIMUM SPACING.
13. THE BOTTOM SLAB SHALL BE AT LEAST 24 HOURS OLD BEFORE PLACING SIDEWALL CONCRETE. ALL SIDEWALL FORMS SHALL REMAIN IN PLACE A MINIMUM OF 24 HOURS AFTER SIDEWALLS ARE POURED BEFORE REMOVAL, AND AFTER REMOVAL SHALL BE IMMEDIATELY TREATED WITH MEMBRANE CURING COMPOUND.
14. PIPE CANNOT PROJECT MORE THAN 3" BEYOND THE FACE OF THE STRUCTURE.
15. ENGINEER SHALL SUBMIT STRUCTURAL DETAILS FOR INLETS GREATER THAN 7' IN DEPTH FOR THE CITY ENGINEER'S REVIEW.
16. DO NOT SCALE THESE DRAWINGS FOR DIMENSIONS OR CLEARANCES. ANY QUESTIONS REGARDING DIMENSIONS SHALL BE BROUGHT TO THE ATTENTION OF THE CITY ENGINEER PRIOR TO CONSTRUCTION.

City of Lynnwood

ENGINEERING SERVICES: DIVISION OF DESIGN DEPARTMENT OF PUBLIC WORKS
SURVEYING SERVICES: DIVISION OF DESIGN DEPARTMENT OF PUBLIC WORKS

DATE	BY	REVISIONS

DATE: DECEMBER 2010
DESIGNED BY: DWL
DRAWN BY: MRS
CHECKED BY: DWL
SCALE: NONE
PROJECT NUMBER: N/A

CONSTRUCTION STANDARDS
BLANKET UNDERDRAIN DETAILS

SHEET NO. 16 | TOTAL SHEETS 43

XREF DRAWING:

DRAWING:

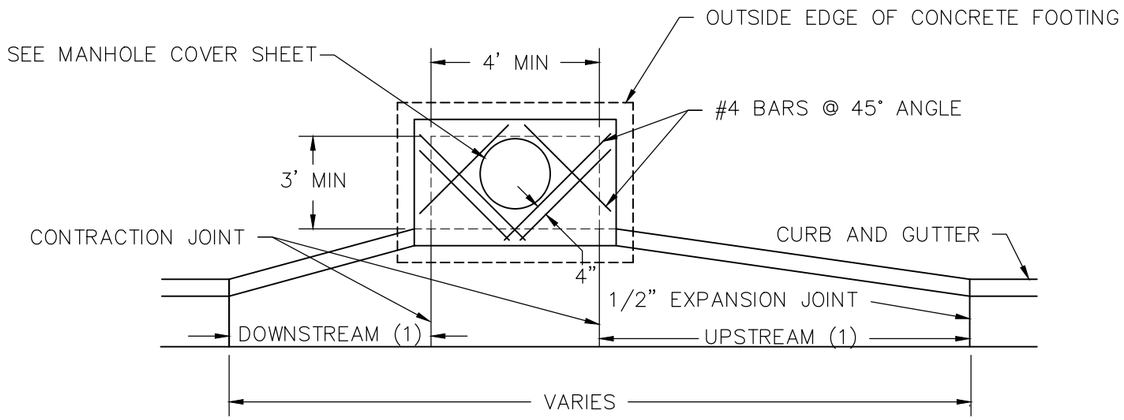

NOTE
1. 10' TRANSITION UPSTREAM SIDE, 5' TRANSITION DOWNSTREAM SIDE, EXCEPT:
   10' TRANSITION BOTH SIDES FOR SUMP INLET
   5' TRANSITION BOTH SIDES FOR SUMP INLET IN CUL-DE-SAC

PLAN VIEW

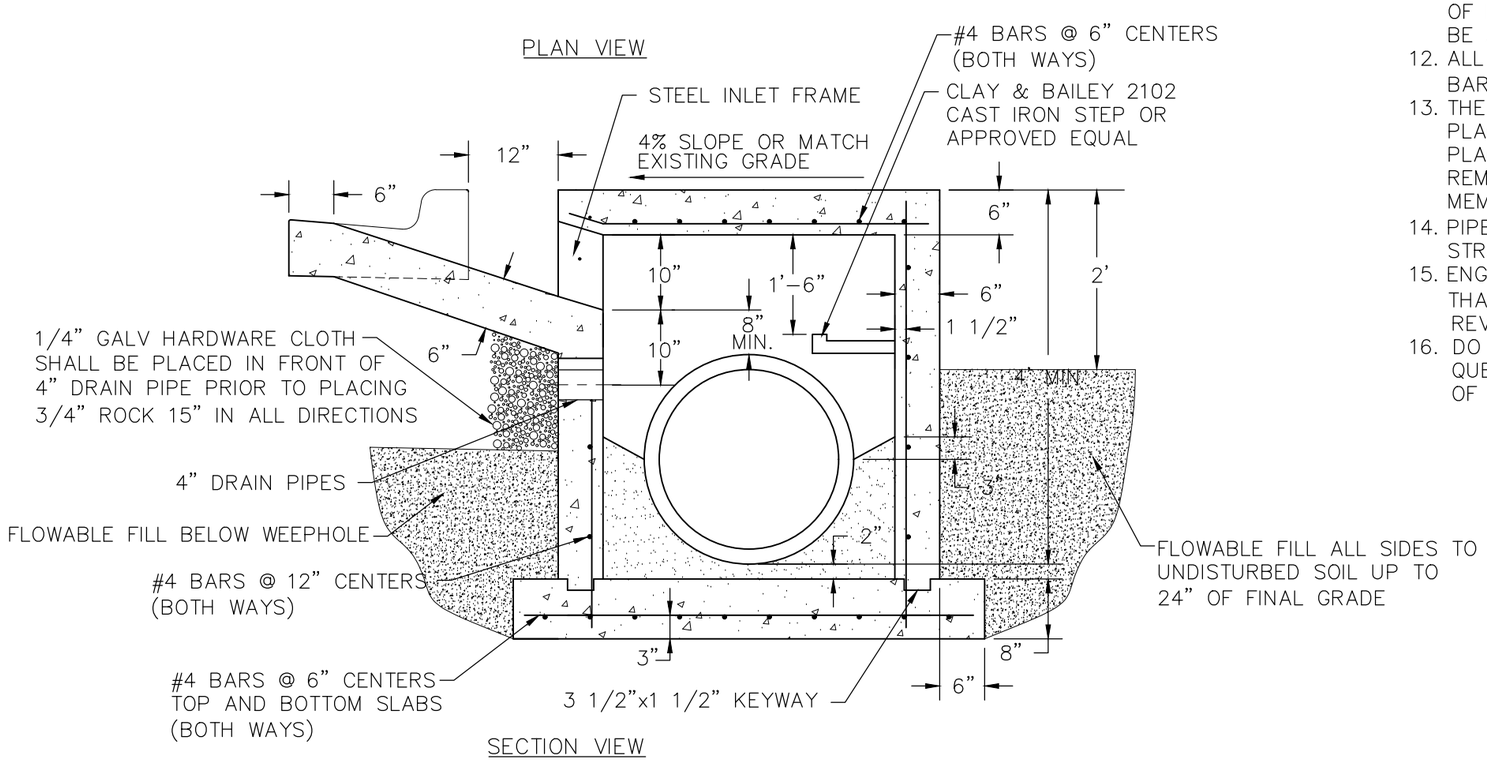

SECTION VIEW

CURB INLET DETAILS

NOTES
1. USE ONLY KCMMB APPROVED CONCRETE.
2. LIDS SHALL BE CAST IN PLACE USING KCMMB APPROVED CONCRETE.
3. INVERTS SHALL BE CONSTRUCTED USING KCMMB APPROVED CONCRETE.
4. THE FIRST DIMENSION LISTED IN THE CONSTRUCTION NOTES IS THE "L" DIMENSION. THE SECOND DIMENSION IS THE "W" DIMENSION.
5. CAST IRON STEPS SHALL BE SPACED AT 1'-4" ON CENTER VERTICALLY. THE DISTANCE FROM THE LAST STEP TO THE TOP OF THE CONCRETE INVERT SHOULD BE A MAXIMUM OF 24".
6. BEVEL ALL EXPOSED EDGES WITH 1/2" RADIUS TOOL
7. ON GRADE INLETS SHALL CONFORM TO THE STREET GRADE AND SUMP INLETS SHALL BE LEVEL.
8. REINFORCING STEEL SHALL BE NEW BILLET, MINIMUM GRADE 40 AS PER ASTM A615, AND SHALL BE BENT COLD.
9. ALL DIMENSIONS RELATIVE TO REINFORCING STEEL ARE TO CENTERLINE OF BARS. 2" CLEARANCE SHALL BE PROVIDED THROUGHOUT UNLESS OTHERWISE NOTED. TOLERANCE OF +/- 1/8" SHALL BE PERMITTED.
10. ALL LAP SPLICES NOT SHOWN SHALL BE A MINIMUM OF 40 BAR DIAMETERS IN LENGTH.
11. ALL DOWELS SHALL BE ACCURATELY PLACED AND SECURELY TIED IN PLACE PRIOR TO PLACEMENT OF BOTTOM SLAB CONCRETE. STICKING OF DOWELS INTO FRESH OR PARTIALLY HARDENED CONCRETE WILL NOT BE ACCEPTABLE.
12. ALL REINFORCING STEEL SHALL BE SUPPORTED ON FABRICATED STEEL BAR SUPPORTS AT 3' MAXIMUM SPACING.
13. THE BOTTOM SLAB SHALL BE AT LEAST 24 HOURS OLD BEFORE PLACING SIDEWALL CONCRETE. ALL SIDEWALL FORMS SHALL REMAIN IN PLACE A MINIMUM OF 24 HOURS AFTER SIDEWALLS ARE POURED BEFORE REMOVAL, AND AFTER REMOVAL SHALL BE IMMEDIATELY TREATED WITH MEMBRANE CURING COMPOUND.
14. PIPE CANNOT PROJECT MORE THAN 3" BEYOND THE FACE OF THE STRUCTURE.
15. ENGINEER SHALL SUBMIT STRUCTURAL DETAILS FOR INLETS GREATER THAN 7' IN DEPTH (RIM TO TOP OF BASE) FOR THE CITY ENGINEER'S REVIEW.
16. DO NOT SCALE THESE DRAWINGS FOR DIMENSIONS OR CLEARANCES. ANY QUESTIONS REGARDING DIMENSIONS SHALL BE BROUGHT TO THE ATTENTION OF THE CITY ENGINEER PRIOR TO CONSTRUCTION.

City of Lynnwood

ENGINEERING SERVICES:
DIVISION OF DESIGN
DEPARTMENT OF PUBLIC WORKS
SURVEYING SERVICES:
DIVISION OF DESIGN
DEPARTMENT OF PUBLIC WORKS

DATE	BY	REVISIONS

DATE: DECEMBER 2010
DESIGNED BY: DWL
DRAWN BY: MRS
CHECKED BY: DWL
SCALE: NONE
PROJECT NUMBER: N/A

CONSTRUCTION STANDARDS
CURB INLET DETAILS

SHEET NO. 17 | TOTAL SHEETS 43

XREF DRAWING:

DRAWING:

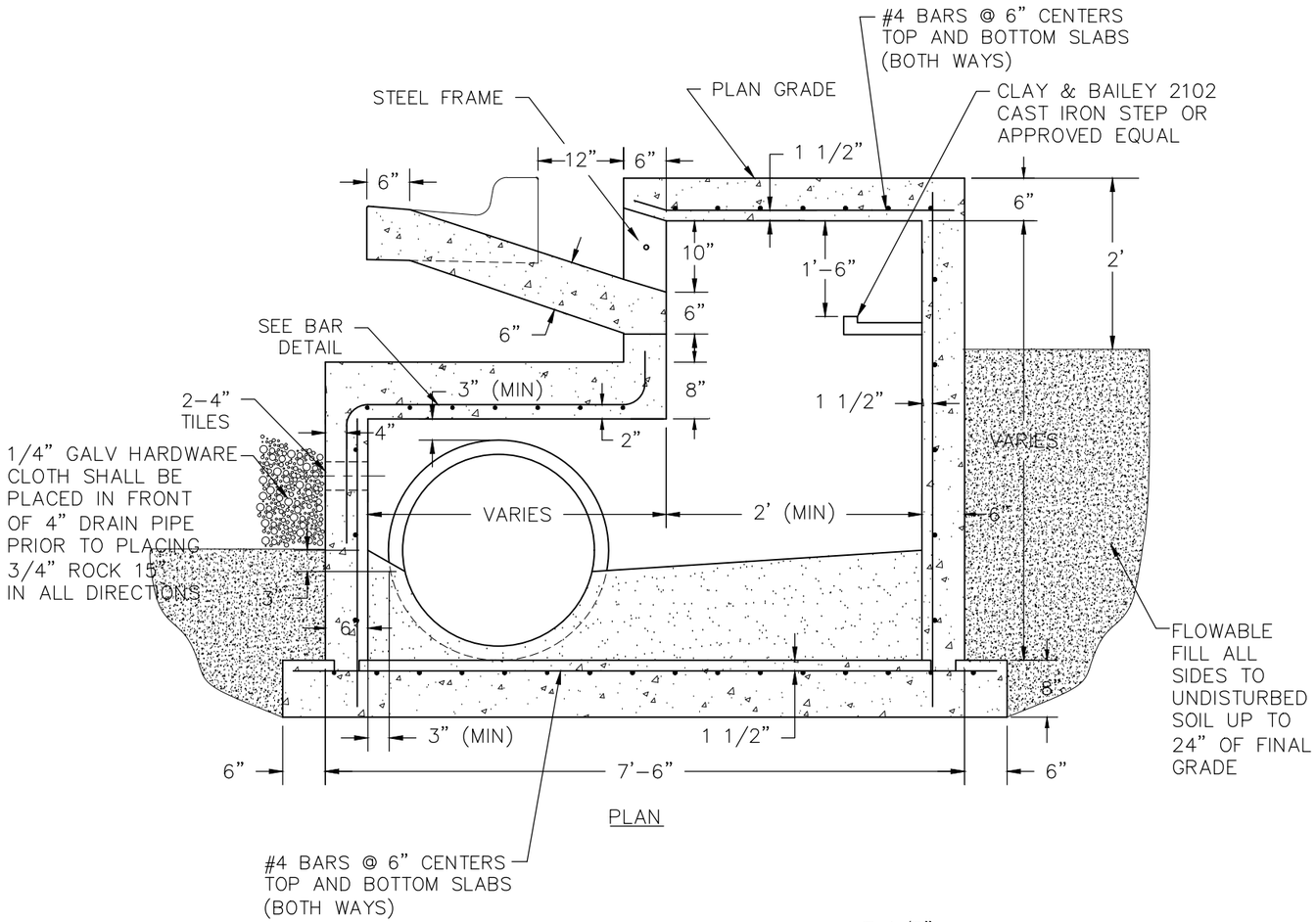

PLAN

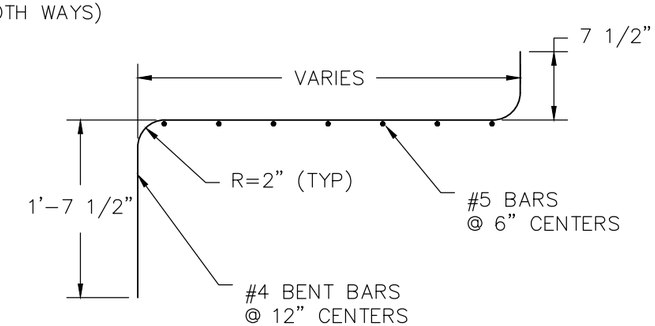

BAR DETAIL

NOTES

1. APPROVAL FROM THE CITY ENGINEER IS REQUIRED FOR USE OF THIS INLET.
2. USE ONLY KCMMB APPROVED CONCRETE THROUGHOUT.
3. LIDS SHALL BE CAST IN PLACE USING KCMMB APPROVED CONCRETE.
4. INVERTS SHALL BE CONSTRUCTED USING KCMMB APPROVED CONCRETE.
5. THE FIRST DIMENSION LISTED IN THE CONSTRUCTION NOTES IS THE "L" DIMENSION. THE SECOND DIMENSION IS THE "W" DIMENSION.
6. CAST IRON STEPS SHALL BE SPACED AT 1'-4" ON CENTER VERTICALLY. THE DISTANCE FROM THE LAST STEP TO THE TOP OF THE CONCRETE INVERT SHOULD BE A MAXIMUM OF 24".
7. BEVEL ALL EXPOSED EDGES WITH 1/2" RADIUS TOOL.
8. ON GRADE INLETS SHALL CONFORM TO THE STREET GRADE AND SUMP INLETS SHALL BE LEVEL.
9. REINFORCING STEEL SHALL BE NEW BILLET, MINIMUM GRADE 40 AS PER ASTM A615, AND SHALL BE BENT COLD.
10. ALL DIMENSIONS RELATIVE TO REINFORCING STEEL ARE TO CENTERLINE OF BARS. 2" CLEARANCE SHALL BE PROVIDED THROUGHOUT UNLESS OTHERWISE NOTED. TOLERANCE OF +/- 1/8" SHALL BE PERMITTED.
11. ALL LAP SPLICES NOT SHOWN SHALL BE A MINIMUM OF 40 BAR DIAMETERS IN LENGTH.
12. ALL DOWELS SHALL BE ACCURATELY PLACED AND SECURELY TIED IN PLACE PRIOR TO PLACEMENT OF BOTTOM SLAB CONCRETE. STICKING OF DOWELS INTO FRESH OR PARTIALLY HARDENED CONCRETE WILL NOT BE ACCEPTABLE.
13. ALL REINFORCING STEEL SHALL BE SUPPORTED ON FABRICATED STEEL BAR SUPPORTS AT 3' MAXIMUM SPACING.
14. THE BOTTOM SLAB SHALL BE AT LEAST 24 HOURS OLD BEFORE PLACING SIDEWALL CONCRETE. ALL SIDEWALL FORMS SHALL REMAIN IN PLACE A MINIMUM OF 24 HOURS AFTER SIDEWALLS ARE POURED BEFORE REMOVAL, AND AFTER REMOVAL SHALL BE IMMEDIATELY TREATED WITH MEMBRANE CURING COMPOUND.
15. PIPE CANNOT PROJECT MORE THAN 3" BEYOND THE FACE OF THE STRUCTURE.
16. ENGINEER SHALL SUBMIT STRUCTURAL DETAILS FOR INLETS GREATER THAN 7' IN DEPTH (RIM TO TOP OF BASE) FOR THE CITY ENGINEER'S REVIEW.
17. DO NOT SCALE THESE DRAWINGS FOR DIMENSIONS OR CLEARANCES. ANY QUESTIONS REGARDING DIMENSIONS SHALL BE BROUGHT TO THE ATTENTION OF THE CITY ENGINEER PRIOR TO CONSTRUCTION.

SPECIAL USE CURB INLET TYPE A

City of Lea Wood

ENGINEERING SERVICES:
DIVISION OF DESIGN
DEPARTMENT OF PUBLIC WORKS
SURVEYING SERVICES:
DIVISION OF DESIGN
DEPARTMENT OF PUBLIC WORKS

REVISIONS	BY	DATE

DATE: DECEMBER 2010
DESIGNED BY: DWL
DRAWN BY: MRS
CHECKED BY: DWL
SCALE: NONE
PROJECT NUMBER: N/A

CONSTRUCTION STANDARDS
SPECIAL USE CURB INLET TYPE A DETAILS

SHEET NO. 18 | TOTAL SHEETS 43

DRAWING: K:\LEAWOOD STANDARDS\CONSTRUCTION\SPECIAL USE CURB INLET.DWG

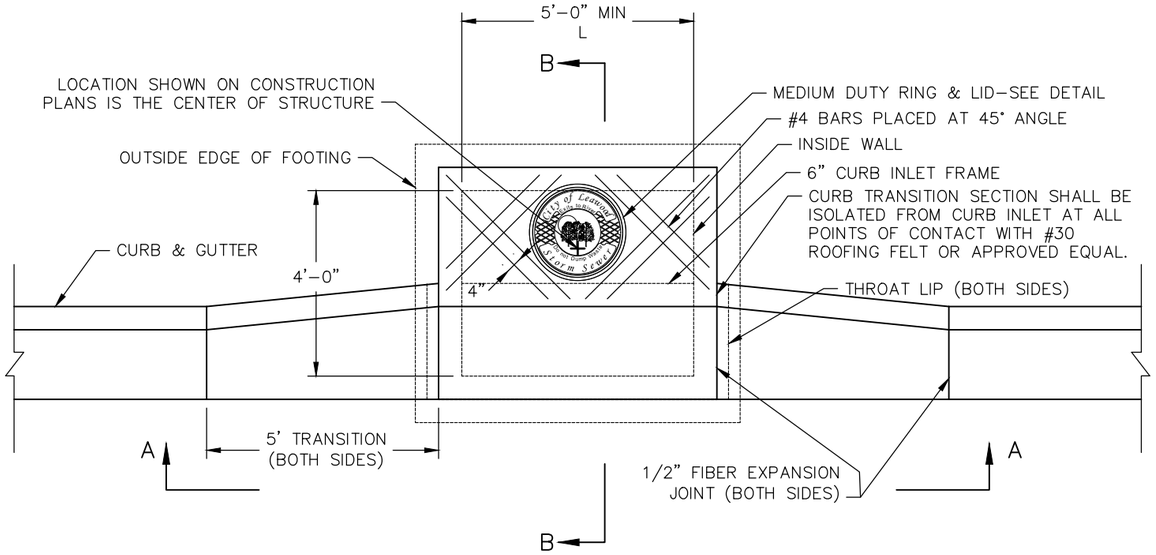

PLAN VIEW

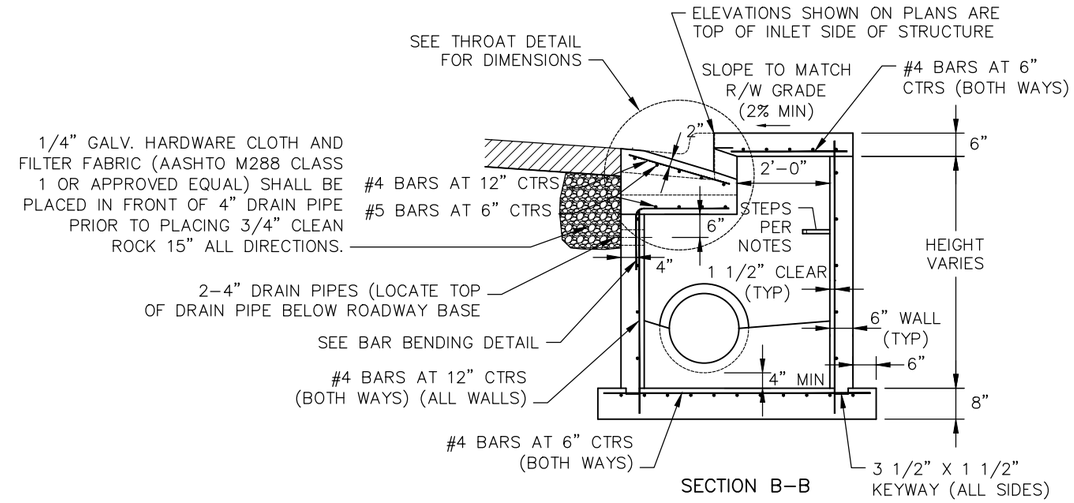

SECTION B-B

CURB INLET NOTES

1. USE KCMMB4K APPROVED CONCRETE THROUGHOUT.
2. THE FIRST DIMENSION LISTED IN THE CONSTRUCTION NOTES IS THE "L" DIMENSION.
3. CAST IRON STEPS SHALL BE SPACED AT 1'-4" ON CENTER VERTICALLY. THE DISTANCE FROM THE LAST STEP TO THE TOP OF THE CONCRETE INVERT SHOULD BE A MAXIMUM OF 24".
4. BEVEL ALL EXPOSED EDGES WITH 3/4" TRIANGULAR MOLDING.
5. ON GRADE CURB INLETS SHALL CONFORM TO THE STREET GRADE AND SUMP INLETS SHALL BE LEVEL.
6. REINFORCING STEEL SHALL BE NEW BILLET, MINIMUM GRADE 60 AS PER ASTM A615M AND SHALL BE BENT COLD.
7. ALL DIMENSIONS RELATIVE TO REINFORCING STEEL ARE TO CENTERLINE OF BARS. 2" CLEARANCE SHALL BE PROVIDED THROUGHOUT UNLESS OTHERWISE NOTED. TOLERANCE OF +/- 1/8" SHALL BE PERMITTED.
8. ALL LAP SPLICES SHALL BE 40 BAR DIAMETERS IN LENGTH.
9. PRECAST STRUCTURES SHALL HAVE THEIR TOPS POURED IN PLACE AND THE WALL STEEL SHALL BE LEFT EXPOSED TO A HEIGHT OF 2" BELOW THE FINISH TOP ELEVATION.
10. ALL DOWELS SHALL BE ACCURATELY PLACED AND SECURELY TIED IN PLACE PRIOR TO PLACEMENT OF BOTTOM SLAB CONCRETE. STICKING OF DOWELS INTO FRESH OR PARTIALLY HARDENED CONCRETE WILL NOT BE ACCEPTABLE.
11. ALL REINFORCING STEEL SHALL BE SUPPORTED ON FABRICATED STEEL BAR SUPPORTS AT 3' MAXIMUM SPACING.
12. DO NOT SCALE THESE DRAWINGS FOR DIMENSIONS OR CLEARANCES. ANY QUESTIONS REGARDING DIMENSIONS SHALL BE BOUGHT TO THE ATTENTION OF THE CITY ENGINEER PRIOR TO CONSTRUCTION.
13. THE BOTTOM SLAB SHALL BE AT LEAST 24 HOURS OLD BEFORE PLACING SIDEWAL CONCRETE. ALL SIDEWALL FORMS SHALL REMAIN IN PLACE A MINIMUM OF 24 HOURS AFTER SIDEWALLS ARE POURED BEFORE REMOVAL, AND AFTER REMOVAL SHALL BE IMMEDIATELY TREATED WITH MEMBRANE CURING COMPOUND.
14. PIPE CANNOT PROJECT MORE THAN 1" BEYOND THE FACE OF THE STRUCTURE.
15. ENGINEER SHALL SUBMIT STRUCTURAL DETAILS FOR INLETS GREATER THAN 7' IN DEPTH FOR THE CITY ENGINEER'S REVIEW.
16. SUBMIT SHOP DRAWINGS FOR CAST IN PLACE STRUCTURES.
17. PIPE CONNECTION TO PRECAST STRUCTURES SHALL HAVE A MINIMUM OF 6" CONCRETE AROUND THE ENTIRE PIPE WITHIN 2' OF THE STRUCTURE.
18. BACKFILL MATERIAL SHALL BE FLOWABLE FILL TO WITHIN 2.5' FROM FINISH ELEVATION OF TOP OF INLET.

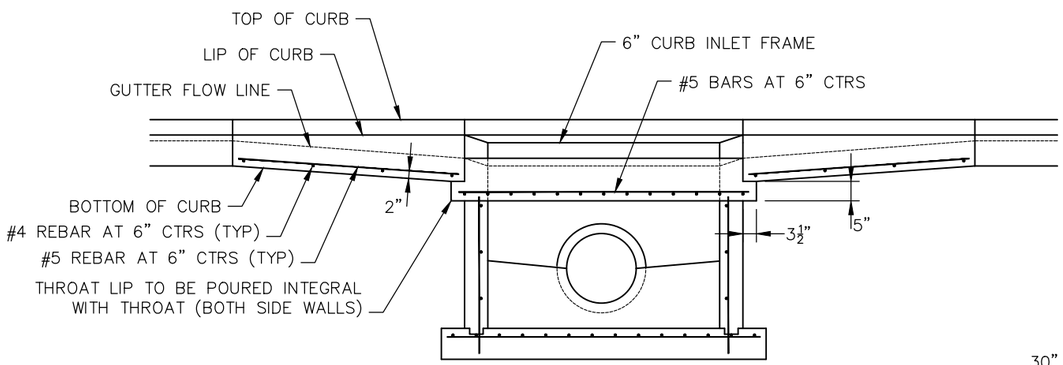

SECTION A-A

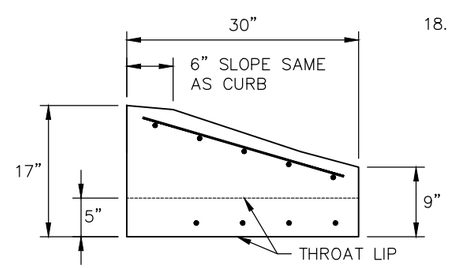

THROAT DETAIL

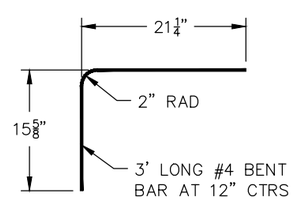

BAR BENDING DETAIL

City of Leawood

ENGINEERING SERVICES: DIVISION OF DESIGN DEPARTMENT OF PUBLIC WORKS
SURVEYING SERVICES: DIVISION OF DESIGN DEPARTMENT OF PUBLIC WORKS

DATE	BY	REVISIONS

DATE: DECEMBER 2010
DESIGNED BY: DWL
DRAWN BY: MRS
CHECKED BY: DWL
SCALE: NONE
PROJECT NUMBER: N/A

CONSTRUCTION STANDARDS
SPECIAL USE CURB INLET TYPE B DETAILS

SHEET NO. 19 | TOTAL SHEETS 35

DRAWING: K:\LEAWOOD STANDARDS\CONSTRUCTION\SPECIAL USE CURB INLET.DWG

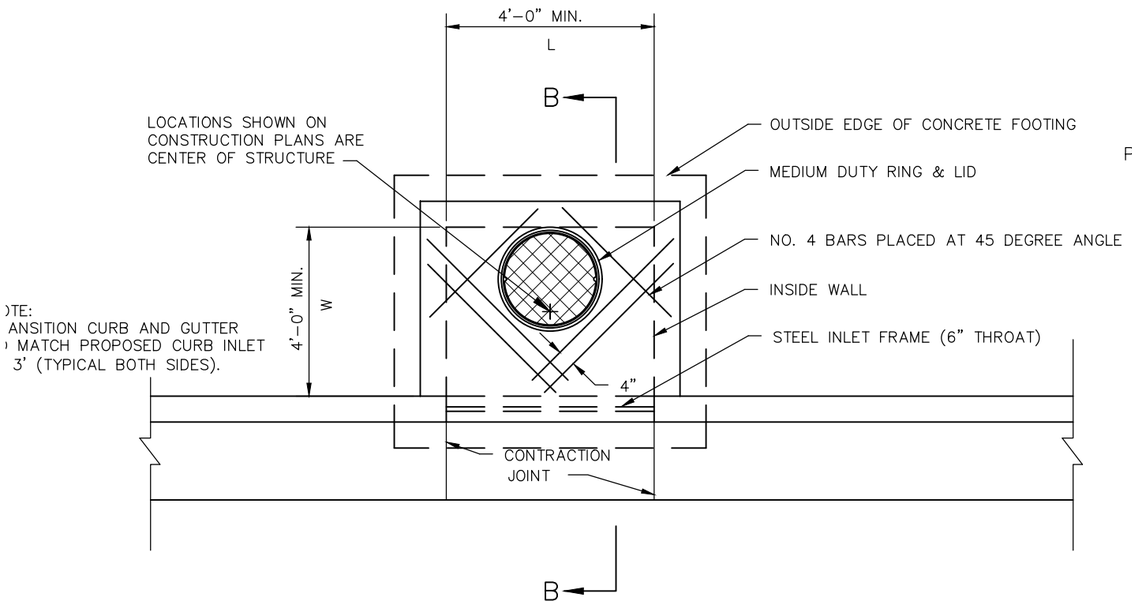

)TE:
ANSITION CURB AND GUTTER
) MATCH PROPOSED CURB INLET
3' (TYPICAL BOTH SIDES).

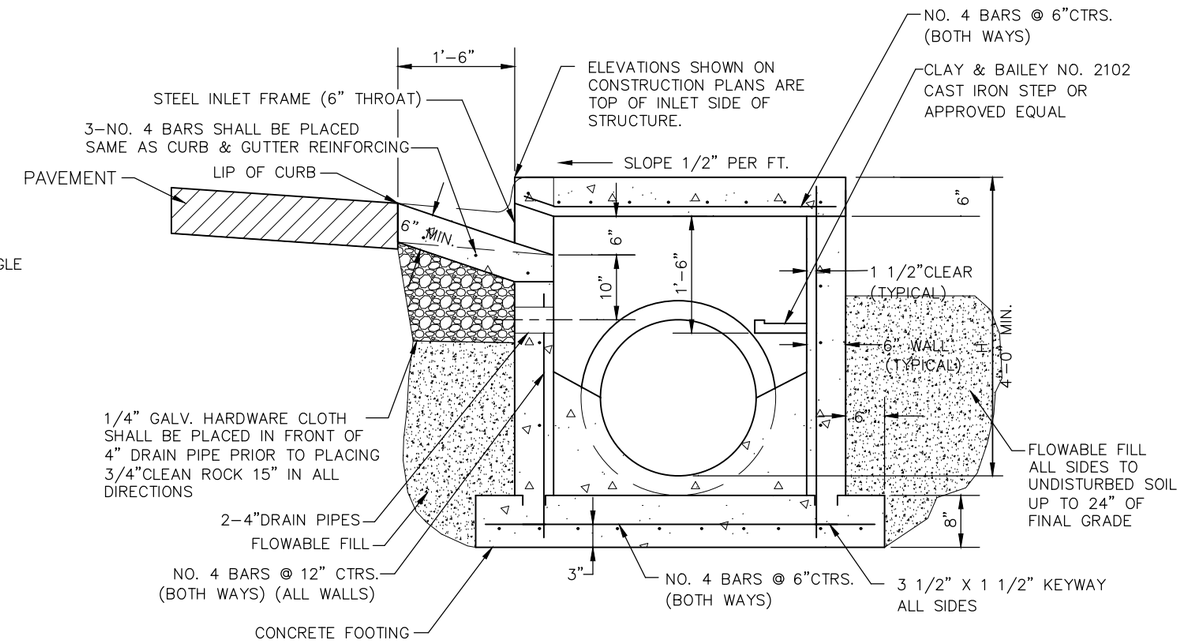

SECTION B–B

NOTES
1. USE KCMMB APPROVED CONCRETE THROUGHOUT
2. THE FIRST DIMENSION LISTED IN THE CONSTRUCTION NOTES IS THE "L" DIMENSION. THE SECOND DIMENSION IS THE "W" DIMENSION.
3. CAST IRON STEPS SHALL BE SPACED AT 1'–4" ON CENTER VERTICALLY. THE DISTANCE FROM THE LAST STEP TO THE TOP OF THE CONCRETE INVERT SHOULD BE A MAXIMUM OF 24".
4. BEVEL ALL EXPOSED EDGES WITH 3/4" TRIANGULAR MOLDING.
5. ON GRADE CURB INLETS SHALL CONFORM TO THE STREET GRADE AND SUMP INLETS SHALL BE LEVEL.
6. ALL CONCRETE USED IN THIS WORK SHALL MEET THE REQUIREMENTS OF THE LEAWOOD MUNICIPAL CODE. ALL CRUSHED STONE USED AS AGGREGATE FOR CONCRETE IN THIS WORK SHALL BE ENTIRELY GRANITE, CALCITE CEMENTED SANDSTONE, QUARTZITE, BASALT, DIABASE, RHYOLITE, OR TRAP ROCK. THE CONTRACTOR SHALL, AT THE CONTRACTOR'S EXPENSE, SUBMIT AND RECEIVE APPROVAL OF A CONCRETE MIX DESIGN BY THE CITY ENGINEER PRIOR TO PLACEMENT OF ANY CONCRETE. THE MIX DESIGN SHALL INCLUDE CERTIFIED TEST RESULTS BY AN INDEPENDENT LABORATORY FOR THE AGGREGATE TESTS REQUIRED BY THE LEAWOOD MUNICIPAL CODE. CONTRACTOR IS RESPONSIBLE FOR PROVIDING AN APPROVED CONCRETE MIX DESIGN PER THE JOHNSON COUNTY CONCRETE BOARD.
7. ALL CONCRETE CONSTRUCTION SHALL MEET THE APPLICABLE REQUIREMENTS OF STANDARD SPECIFICATIONS FOR STATE ROAD AND BRIDGE CONSTRUCTION, KANSAS DEPARTMENT OF TRANSPORTATION, LATEST EDITION, AND SPECIAL PROVISIONS, EXCEPT AS MODIFIED IN THE LEAWOOD MUNICIPAL CODE.
8. REINFORCING STEEL SHALL BE NEW BILLET, MINIMUM GRADE 40 AS PER ASTM A615, AND SHALL BE BENT COLD.
9. ALL DIMENSIONS RELATIVE TO REINFORCING STEEL ARE TO CENTERLINE OF BARS. 2" CLEARANCE SHALL BE PROVIDED THROUGHOUT UNLESS OTHERWISE NOTED. TOLERANCE OF +/– 1/8" SHALL BE PERMITTED.
10. ALL DOWELS SHALL BE ACCURATELY PLACED AND SECURELY TIED IN PLACE PRIOR TO PLACEMENT OF BOTTOM SLAB CONCRETE. STICKING OF DOWELS INTO FRESH OR PARTIALLY HARDENED CONCRETE WILL NOT BE ACCEPTABLE.
11. ALL REINFORCING STEEL SHALL BE SUPPORTED ON FABRICATED STEEL BAR SUPPORTS AT 3' MAXIMUM SPACING.
12. DO NOT SCALE THESE DRAWINGS FOR DIMENSIONS OR CLEARANCES. ANY QUESTIONS REGARDING DIMENSIONS SHALL BE BOUGHT TO THE ATTENTION OF THE CITY ENGINEER PRIOR TO CONSTRUCTION.
13. THE BOTTOM SLAB SHALL BE AT LEAST 24 HOURS OLD BEFORE PLACING SIDEWALL CONCRETE. ALL SIDEWALL FORMS SHALL REMAIN IN PLACE A MINIMUM OF 24 HOURS AFTER SIDEWALLS ARE POURED BEFORE REMOVAL, AND AFTER REMOVAL SHALL BE IMMEDIATELY TREATED WITH MEMBRANE CURING COMPOUND.
14. PIPE CANNOT PROJECT MORE THAN 3" BEYOND THE FACE OF THE STRUCTURE.
15. ENGINEER SHALL SUBMIT STRUCTURAL DETAILS FOR INLETS GREATER THAN 7' IN DEPTH (RIM TO TOP OF BASE) FOR THE CITY ENGINEER'S REVIEW.
16. SUBMIT SHOP DRAWINGS FOR CAST IN PLACE STRUCTURES.

NON–SETBACK CURB INLET

City of Leawood

ENGINEERING SERVICES:
DIVISION OF DESIGN
DEPARTMENT OF PUBLIC WORKS
SURVEYING SERVICES:
DIVISION OF DESIGN
DEPARTMENT OF PUBLIC WORKS

REVISIONS	BY	DATE

DATE: DECEMBER 2010
DESIGNED BY: DWL
DRAWN BY: MRS
CHECKED BY: DWL
SCALE: NONE
PROJECT NUMBER: N/A

CONSTRUCTION STANDARDS
NON–SETBACK CURB INLET DETAILS

SHEET NO.	TOTAL SHEETS
20	43

XREF DRAWING:

DRAWING:

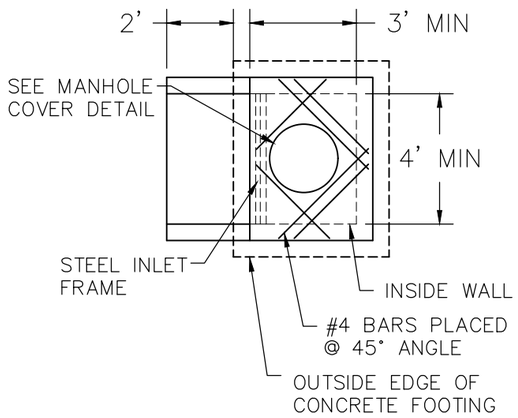

PLAN

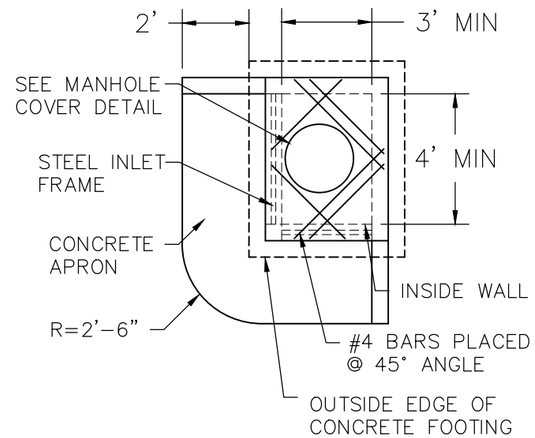

PLAN WITH 2 ADJACENT OPENINGS

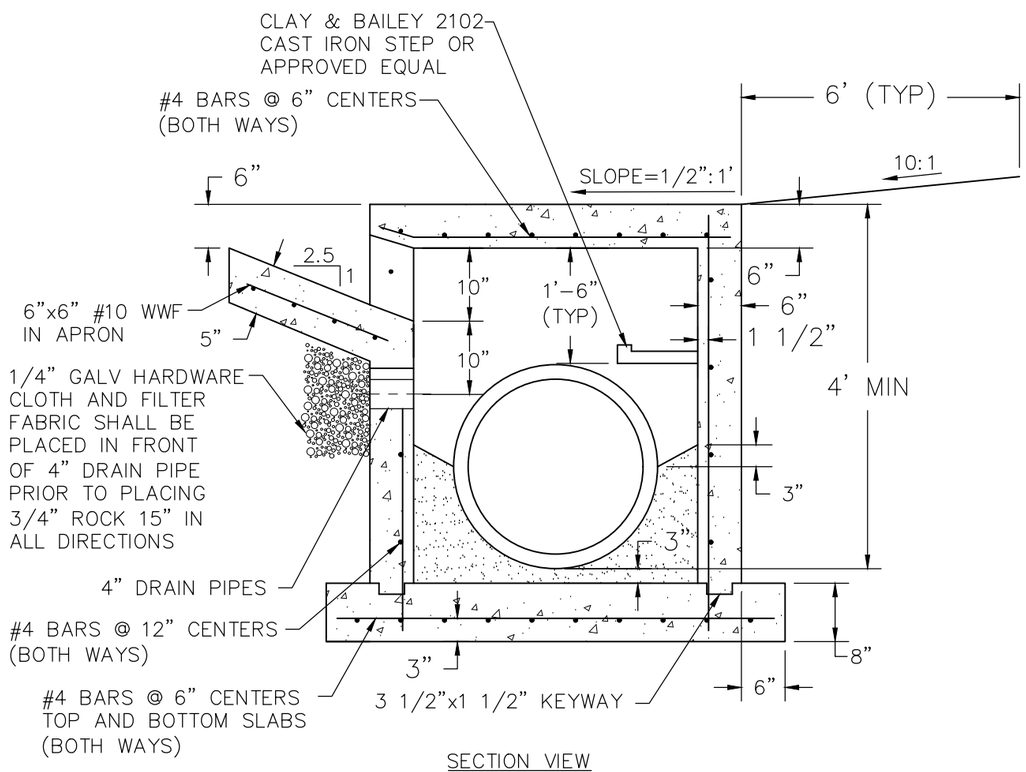

SECTION VIEW

AREA INLET DETAILS

NOTES

1. USE ONLY KCMMB APPROVED CONCRETE THROUGHOUT.
2. IF MORE THAN ONE SIDE IS OPEN, THEN AREA INLET LID SHALL BE CAST IN PLACE USING KCMMB APPROVED CONCRETE.
3. INVERTS SHALL BE CONSTRUCTED USING KCMMB APPROVED CONCRETE.
4. THE FIRST DIMENSION LISTED IN THE CONSTRUCTION NOTES IS THE "L" DIMENSION. THE SECOND DIMENSION IS THE "W" DIMENSION.
5. CAST IRON STEPS SHALL BE SPACED AT 1'-4" ON CENTER VERTICALLY. THE DISTANCE FROM THE LAST STEP TO THE TOP OF THE CONCRETE INVERT SHOULD BE A MAXIMUM OF 24".
6. BEVEL ALL EXPOSED EDGES WITH 3/4" TRIANGULAR MOLDING.
7. REINFORCING STEEL SHALL BE NEW BILLET, MINIMUM GRADE 40 AS PER ASTM A615, AND SHALL BE BENT COLD.
8. ALL DIMENSIONS RELATIVE TO REINFORCING STEEL ARE TO CENTERLINE OF BARS. 2" CLEARANCE SHALL BE PROVIDED THROUGHOUT UNLESS OTHERWISE NOTED. TOLERANCE OF +/- 1/8" SHALL BE PERMITTED.
9. ALL CONCRETE CONSTRUCTION SHALL MEET THE APPLICABLE REQUIREMENTS OF STANDARD SPECIFICATIONS FOR STATE ROAD AND BRIDGE CONSTRUCTION, KANSAS DEPARTMENT OF TRANSPORTATION, LATEST EDITION, AND SPECIAL PROVISIONS, EXCEPT AS MODIFIED IN THE LEAWOOD MUNICIPAL CODE.
10. ALL DOWELS SHALL BE ACCURATELY PLACED AND SECURELY TIED IN PLACE PRIOR TO PLACEMENT OF BOTTOM SLAB CONCRETE. STICKING OF DOWELS INTO FRESH OR PARTIALLY HARDENED CONCRETE WILL NOT BE ACCEPTABLE.
11. DO NOT SCALE THESE DRAWINGS FOR DIMENSIONS OR CLEARANCES. ANY QUESTIONS REGARDING DIMENSIONS SHALL BE BOUGHT TO THE ATTENTION OF THE CITY ENGINEER PRIOR TO CONSTRUCTION.
12. THE BOTTOM SLAB SHALL BE AT LEAST 24 HOURS OLD BEFORE PLACING SIDEWALL CONCRETE. ALL SIDEWALL FORMS SHALL REMAIN IN PLACE A MINIMUM OF 24 HOURS AFTER SIDEWALLS ARE POURED BEFORE REMOVAL, AND AFTER REMOVAL SHALL BE IMMEDIATELY TREATED WITH MEMBRANE CURING COMPOUND.
13. PIPE CANNOT PROJECT MORE THAN 3" BEYOND THE FACE OF THE STRUCTURE.
14. ENGINEER SHALL SUBMIT STRUCTURAL DETAILS FOR INLETS GREATER THAN 7' IN DEPTH (RIM TO TOP OF BASE) FOR THE CITY ENGINEER'S REVIEW.
15. DO NOT SCALE THESE DRAWINGS FOR DIMENSIONS OR CLEARANCES. ANY QUESTIONS REGARDING DIMENSIONS SHALL BE BROUGHT TO THE ATTENTION OF THE CITY ENGINEER PRIOR TO CONSTRUCTION

City of Leawood

ENGINEERING SERVICES:
DIVISION OF DESIGN
DEPARTMENT OF PUBLIC WORKS
SURVEYING SERVICES:
DIVISION OF DESIGN
DEPARTMENT OF PUBLIC WORKS

DATE	BY	REVISIONS

DATE: DECEMBER 2010
DRAWN BY: DWL
CHECKED BY: DWL
SCALE: NONE
PROJECT NUMBER: N/A

CONSTRUCTION STANDARDS
AREA INLET DETAILS

SHEET NO. 21 | TOTAL SHEETS 43

DRAWING: K:\LEAWOOD_STANDARDS\CONSTRUCTION\AREA INLET.DWG

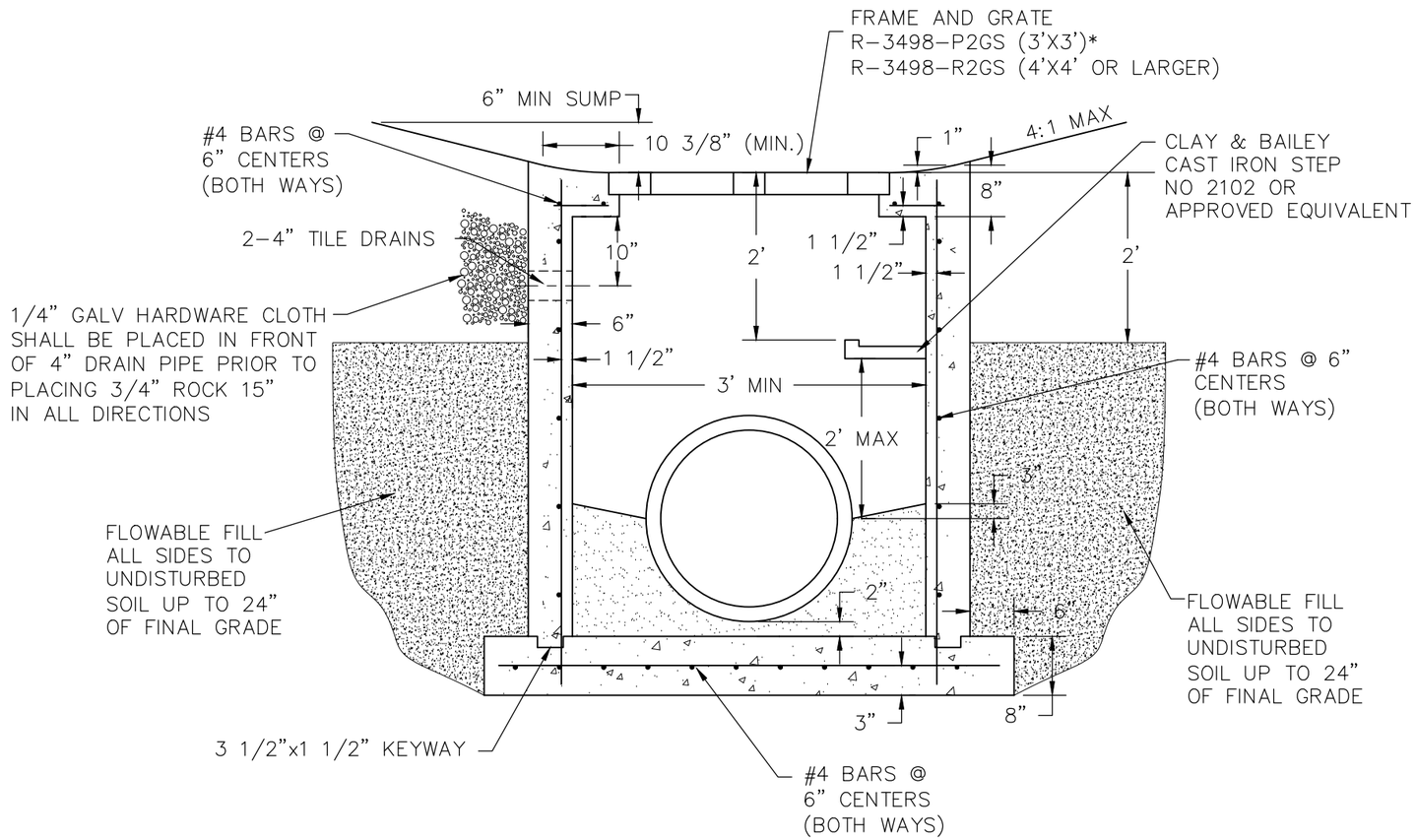

SECTION VIEW

* BOXES DEEPER THAN 4' FROM FLOWLINE TO RIM SHALL BE 4'X4' MIN, UP TO A MAX OF 5'X5'

NOTES

1. APPROVAL FROM THE CITY ENGINEER IS REQUIRED FOR USE OF THIS INLET.
2. USE ONLY KCMMB APPROVED CONCRETE THROUGHOUT.
3. INVERTS SHALL BE CONSTRUCTED USING KCMMB APPROVED CONCRETE.
4. THE FIRST DIMENSION LISTED IN THE CONSTRUCTION NOTES IS THE "L" DIMENSION. THE SECOND DIMENSION IS THE "W" DIMENSION.
5. CAST IRON STEPS SHALL BE SPACED AT 1'-4" ON CENTER VERTICALLY. THE DISTANCE FROM THE LAST STEP TO THE TOP OF THE CONCRETE INVERT SHOULD BE A MAXIMUM OF 24".
6. BEVEL ALL EXPOSED EDGES WITH 3/4" TRIANGULAR MOLDING.
7. REINFORCING STEEL SHALL BE NEW BILLET, MINIMUM GRADE 40 AS PER ASTM A615, AND SHALL BE BENT COLD.
8. ALL DIMENSIONS RELATIVE TO REINFORCING STEEL ARE TO CENTERLINE OF BARS. 2" CLEARANCE SHALL BE PROVIDED THROUGHOUT UNLESS OTHERWISE NOTED. TOLERANCE OF +/- 1/8" SHALL BE PERMITTED.
9. ALL CONCRETE CONSTRUCTION SHALL MEET THE APPLICABLE REQUIREMENTS OF STANDARD SPECIFICATIONS FOR STATE ROAD AND BRIDGE CONSTRUCTION, KANSAS DEPARTMENT OF TRANSPORTATION, LATEST EDITION, AND SPECIAL PROVISIONS, EXCEPT AS MODIFIED IN THE LEAWOOD MUNICIPAL CODE.
10. ALL DOWELS SHALL BE ACCURATELY PLACED AND SECURELY TIED IN PLACE PRIOR TO PLACEMENT OF BOTTOM SLAB CONCRETE. STICKING OF DOWELS INTO FRESH OR PARTIALLY HARDENED CONCRETE WILL NOT BE ACCEPTABLE.
11. DO NOT SCALE THESE DRAWINGS FOR DIMENSIONS OR CLEARANCES. ANY QUESTIONS REGARDING DIMENSIONS SHALL BE BOUGHT TO THE ATTENTION OF THE CITY ENGINEER PRIOR TO CONSTRUCTION.
12. THE BOTTOM SLAB SHALL BE AT LEAST 24 HOURS OLD BEFORE PLACING SIDEWALL CONCRETE. ALL SIDEWALL FORMS SHALL REMAIN IN PLACE A MINIMUM OF 24 HOURS AFTER SIDEWALLS ARE POURED BEFORE REMOVAL, AND AFTER REMOVAL SHALL BE IMMEDIATELY TREATED WITH MEMBRANE CURING COMPOUND.
13. PIPE CANNOT PROJECT MORE THAN 3" BEYOND THE FACE OF THE STRUCTURE.
14. ENGINEER SHALL SUBMIT STRUCTURAL DETAILS FOR INLETS GREATER THE 7' IN DEPTH (RIM TO TOP OF BASE) FOR THE CITY ENGINEER'S REVIEW.
15. DO NOT SCALE THESE DRAWINGS FOR DIMENSIONS OR CLEARANCES. ANY QUESTIONS REGARDING DIMENSIONS SHALL BE BROUGHT TO THE ATTENTION OF THE CITY ENGINEER PRIOR TO CONSTRUCTION.

SPECIAL USE AREA INLET

City of Leawood

ENGINEERING SERVICES:
DIVISION OF DESIGN
DEPARTMENT OF PUBLIC WORKS
SURVEYING SERVICES:
DIVISION OF DESIGN
DEPARTMENT OF PUBLIC WORKS

DATE	BY	REVISIONS

DATE: DECEMBER 2010
DESIGNED BY: DWL
DRAWN BY: MR
CHECKED BY: DWL
SCALE: NONE
PROJECT NUMBER: N/A

CONSTRUCTION STANDARDS
SPECIAL USE AREA INLET DETAILS

SHEET NO. 22 | TOTAL SHEETS 43

DRAWING: K:\\LEAWOOD_STANDARDS\CONSTRUCTION\SPECIAL_USE_AREA_INLET.DWG

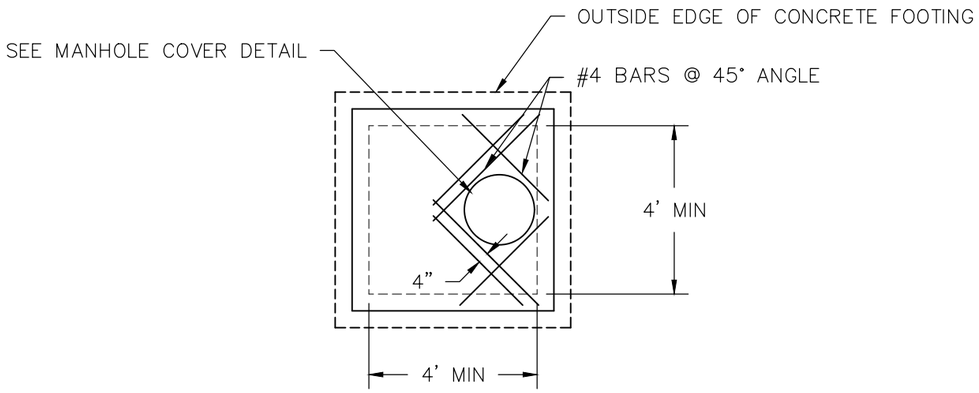

PLAN

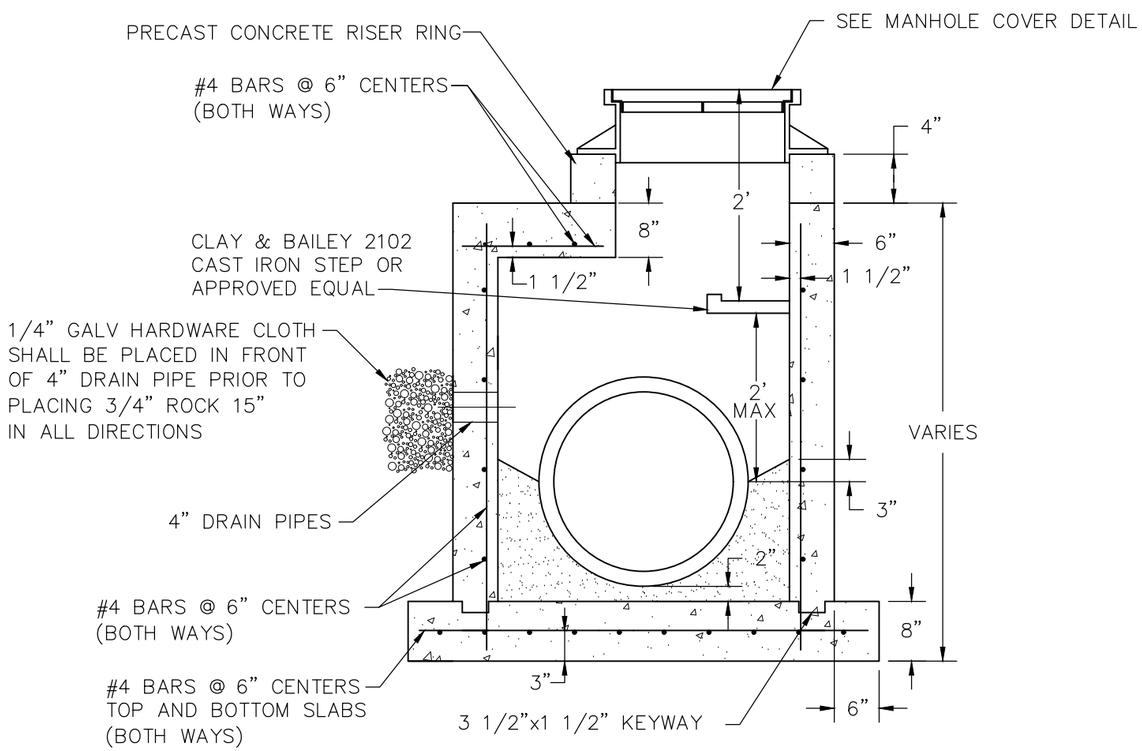

SECTION VIEW

NOTES

1. USE ONLY KCMMB APPROVED CONCRETE THROUGHOUT.
2. LIDS MAY BE PRECAST USING KCMMB APPROVED CONCRETE.
3. INVERTS SHALL BE CONSTRUCTED USING KCMMB APPROVED CONRETE.
4. THE FIRST DIMENSION LISTED IN THE CONSTRUCTION NOTES IS THE "L" DIMENSION. THE SECOND DIMENSION IS THE "W" DIMENSION.
5. CAST IRON STEPS SHALL BE SPACED AT 1'–4" ON CENTER VERTICALLY. THE DISTANCE FROM THE LAST STEP TO THE TOP OF THE CONCRETE INVERT SHOULD BE A MAXIMUM OF 24".
6. BEVEL ALL EXPOSED EDGES WITH 3/4" CHAMFER MOLDING.
7. REINFORCING STEEL SHALL BE NEW BILLET, MINIMUM GRADE 40 AS PER ASTM A615, AND SHALL BE BENT COLD.
8. ALL DIMENSIONS RELATIVE TO REINFORCING STEEL ARE TO CENTERLINE OF BARS. 2" CLEARANCE SHALL BE PROVIDED THROUGHOUT UNLESS OTHERWISE NOTED. TOLERANCE OF +/– 1/8" SHALL BE PERMITTED.
9. ALL LAP SPLICES NOT SHOWN SHALL BE A MINIMUM OF 40 BAR DIAMETERS IN LENGTH.
10. ALL CONCRETE CONSTRUCTION SHALL MEET THE APPLICABLE REQUIREMENTS OF STANDARD SPECIFICATIONS FOR STATE ROAD AND BRIDGE CONSTRUCTION, KANSAS DEPARTMENT OF TRANSPORTATION, LATEST EDITION, AND SPECIAL PROVISIONS, EXCEPT AS MODIFIED IN THE LEAWOOD MUNICIPAL CODE.
11. ALL DOWELS SHALL BE ACCURATELY PLACED AND SECURELY TIED IN PLACE PRIOR TO PLACEMENT OF BOTTOM SLAB CONCRETE. STICKING OF DOWELS INTO FRESH OR PARTIALLY HARDENED CONCRETE WILL NOT BE ACCEPTABLE.
12. ALL REINFORCING STEEL SHALL BE SUPPORTED ON FABRICATED STEEL BAR SUPPORTS AT 3' MAXIMUM SPACING.
13. DO NOT SCALE THESE DRAWINGS FOR DIMENSIONS OR CLEARANCES. ANY QUESTIONS REGARDING DIMENSIONS SHALL BE BOUGHT TO THE ATTENTION OF THE CITY ENGINEER PRIOR TO CONSTRUCTION.
14. THE BOTTOM SLAB SHALL BE AT LEAST 24 HOURS OLD BEFORE PLACING SIDEWALL CONCRETE. ALL SIDEWALL FORMS SHALL REMAIN IN PLACE A MINIMUM OF 24 HOURS AFTER SIDEWALLS ARE POURED BEFORE REMOVAL, AND AFTER REMOVAL SHALL BE IMMEDIATELY TREATED WITH MEMBRANE CURING COMPOUND.
15. PIPE CANNOT PROJECT MORE THEN 3" BEYOND THE FACE OF THE STRUCTURE.
16. ENGINEER SHALL SUBMIT STRUCTURAL DETAILS FOR JUNCTION BOXES GREATER THAN 7' IN DEPTH (RIM TO TOP OF BASE) FOR THE CITY ENGINEER'S REVIEW.
17. DO NOT SCALE THESE DRAWINGS FOR DIMENSIONS OR CLEARANCES. ANY QUESTIONS REGARDING DIMENSIONS SHALL BE BROUGHT TO THE ATTENTION OF THE CITY ENGINEER PRIOR TO CONSTRUCTION.

JUNCTION BOX DETAILS

City of Leawood

ENGINEERING SERVICES:
DIVISION OF DESIGN
DEPARTMENT OF PUBLIC WORKS
SURVEYING SERVICES:
DIVISION OF DESIGN
DEPARTMENT OF PUBLIC WORKS

REVISIONS	DATE	BY

DATE: DECEMBER 2010
DESIGNED BY: DWL
DRAWN BY: MRS
CHECKED BY: DWL
SCALE: NONE
PROJECT NUMBER: N/A

CONSTRUCTION STANDARDS
JUNCTION BOX DETAILS

SHEET NO. 23 | TOTAL SHEETS 43

DRAWING: K:\LEAWOOD STANDARDS\CONSTRUCTION\JUNCTION BOX DETAILS.DWG

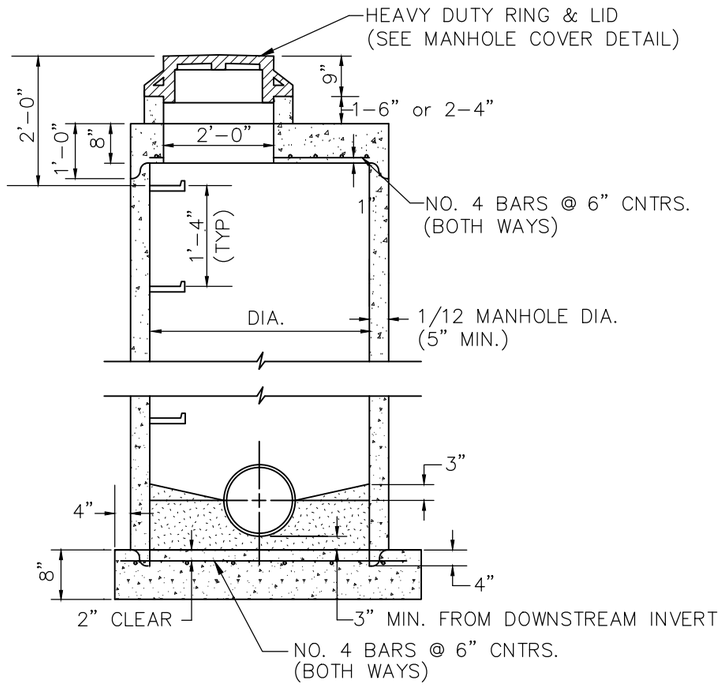

STORM SEWER PRECAST
MANHOLE (SHALLOW TYPE)

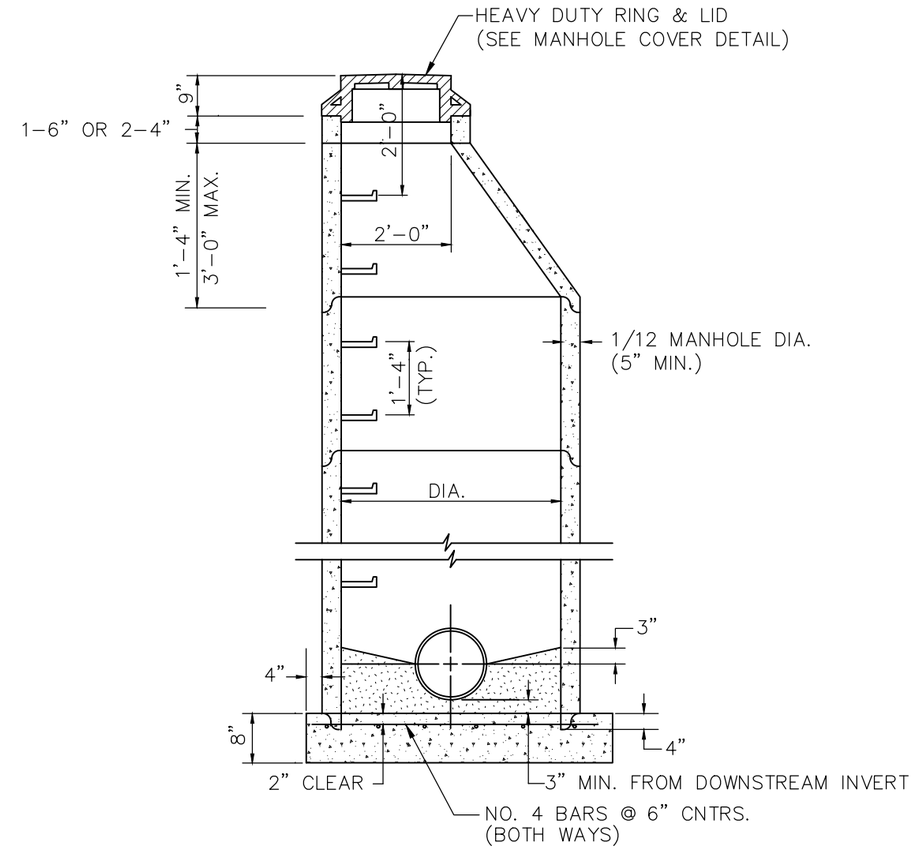

STORM SEWER PRECAST
MANHOLE (ECCENTRIC CONE)

NOTES:
1. USE ONLY KCMMB APPROVED CONCRETE THROUGHOUT.
2. INVERTS SHALL BE CONSTRUCTED USING KCMMB APPROVED CONCRETE.
3. THE INSIDE DIAMETER OF THE MANHOLE SHALL BE 5' FOR PIPE DIAMETERS FROM 15" THROUGH 24", WITH A MAXIMUM OF TWO PIPES. FOR LARGER PIPES OR MORE THAN TWO PIPES, A JUNCTION BOX IS REQUIRED.
4. ALL MANHOLE BASES (PRECAST OR POURED IN PLACE) SHALL HAVE NO.4 REINFORCING BARS PLACED ON 12" CENTERS BOTH WAYS.
5. STANDARD CAST IRON MANHOLE STEPS TO BE CLAY & BAILEY MANUFACTURING CO. NO. 2102 OR APPROVED EQUAL. STEEL CORE, PLASTIC COATED STEPS MAY BE USED (M.A. IND., INC. NO. PS1-PF, PS2-PF, OR APPROVED EQUAL).
6. REINFORCEMENT IN ALL SECTIONS SHALL EQUAL OR EXCEED A.S.T.M. C-478 SPECIFICATIONS.
7. MASTIC MATERIAL TO BE USED AT ALL SECTION JOINTS. O-RINGS MAY BE USED FOR JOINTS BELOW THE CONE SECTION, BUT THE CONE SECTION ITSELF SHALL NOT HAVE O-RING JOINTS.
8. APPROVED GASKET OR CONCRETE MORTAR TO BE USED AROUND PIPE IN KNOCK-OUTS.
9. PIPE CANNOT PROJECT MORE THAN 3" BEYOND THE FACE OF THE STRUCTURE.
10. ENGINEER SHALL SUBMIT STRUCTURAL DETAILS FOR MANHOLES GREATER THAT 7' IN DEPTH (RIM TO TOP OF BASE) FOR THE CITY ENGINEER'S REVIEW.
11. DO NOT SCALE THESE DRAWING FOR DIMENSIONS OR CLEARANCES. ANY QUESTIONS REGARDING DIMENSIONS SHALL BE BROUGHT TO THE ATTENTION OF THE CITY ENGINEER PRIOR TO CONSTRUCTION.

City of Leawood

ENGINEERING SERVICES:
DIVISION OF DESIGN
DEPARTMENT OF PUBLIC WORKS
SURVEYING SERVICES:
DIVISION OF DESIGN
DEPARTMENT OF PUBLIC WORKS

REVISIONS	DATE	BY

DATE: DECEMBER 2010
DESIGNED BY: DWL
DRAWN BY: MRS
CHECKED BY: DWL
SCALE: NONE
PROJECT NUMBER: N/A

CONSTRUCTION STANDARDS
MANHOLE DETAILS

SHEET NO.	TOTAL SHEETS
24	43

DRAWING: K:\LEAWOOD STANDARDS\CONSTRUCTION\MANHOLE.DWG

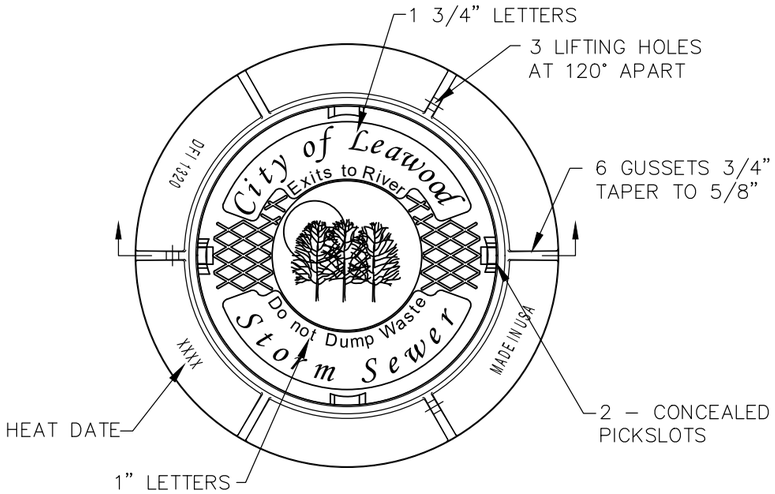

NOTE:
1. FOR PUBLIC USE ONLY
2. MUD RING IS OPTIONAL.

PUBLIC MANHOLE COVER DETAIL

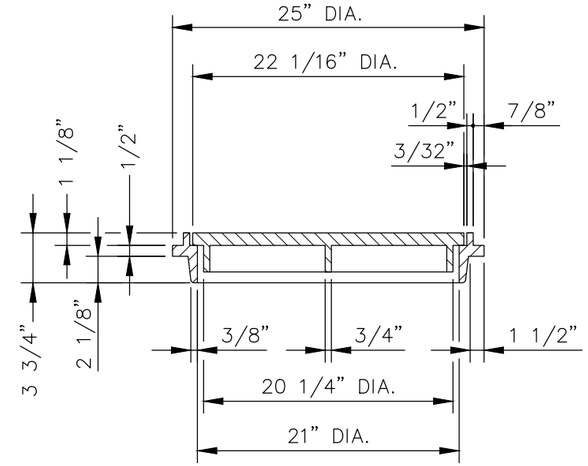

MEDIUM DUTY RING & LID

DEETER NO. 2016
OR APPROVED EQUAL

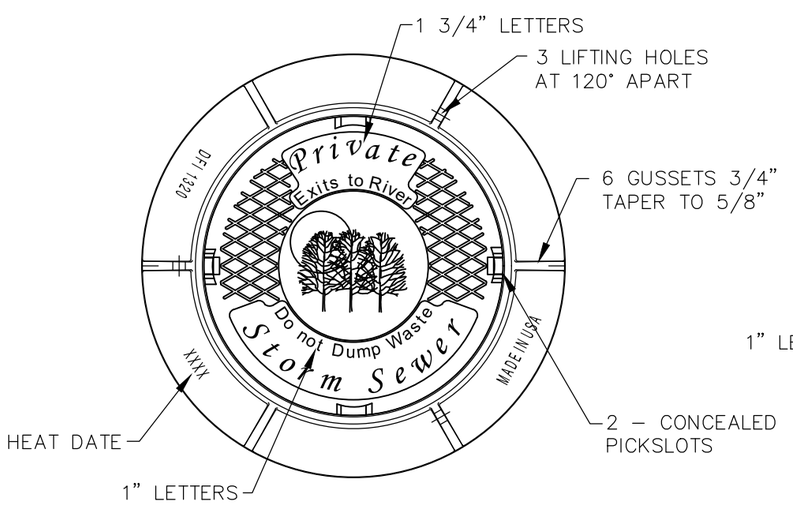

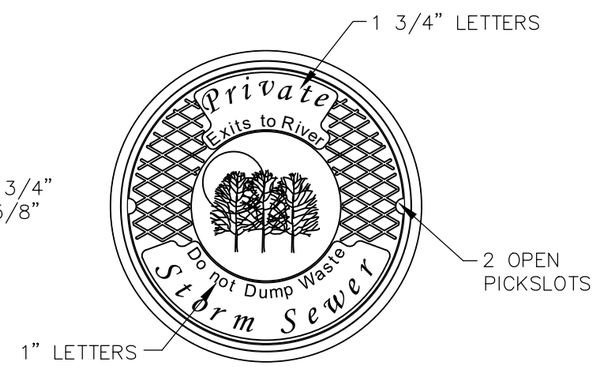

NOTE:
1. MUD RING IS OPTIONAL.

PRIVATE MANHOLE COVER DETAIL

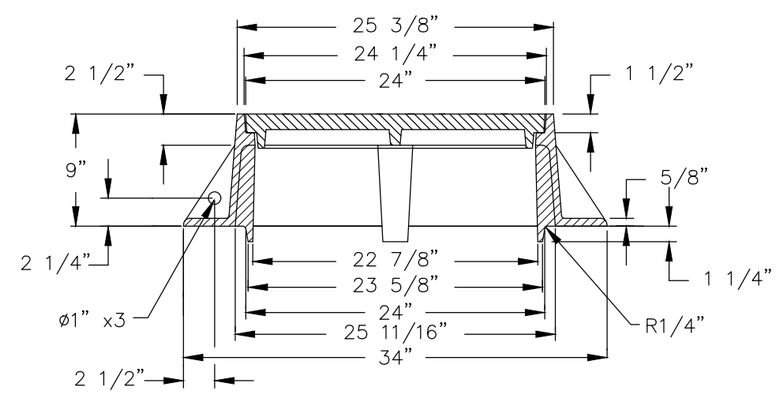

NOTE:
1. FURNISHED WITH MACHINED HORIZONTAL BEARING SURFACE.

HEAVY DUTY RING & LID

DEETER NO. 1320
OR APPROVED EQUAL

City of Leawood

ENGINEERING SERVICES:
DIVISION OF DESIGN
DEPARTMENT OF PUBLIC WORKS
SURVEYING SERVICES:
DIVISION OF DESIGN
DEPARTMENT OF PUBLIC WORKS

DATE	BY	REVISIONS

DATE: DECEMBER 2010
DESIGNED BY: DWL
DRAWN BY: MRS
CHECKED BY: DWL
SCALE: NONE
PROJECT NUMBER: N/A

CONSTRUCTION STANDARDS
MANHOLE COVER DETAILS

SHEET NO. 25 | TOTAL SHEETS 43

DRAWING: K:\LEAWOOD_STANDARDS\CONSTRUCTION\MANHOLE_COVER.DWG

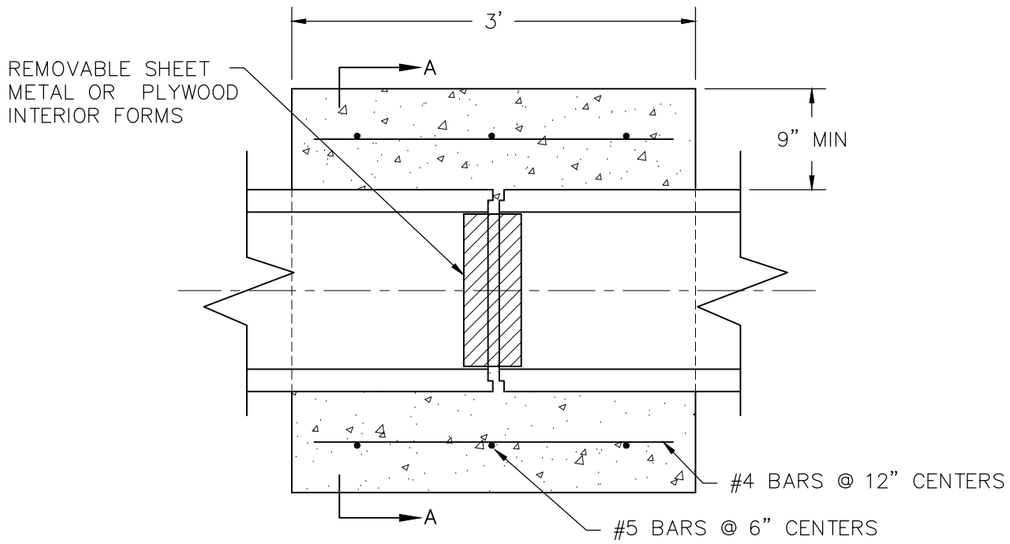

SECTION B–B

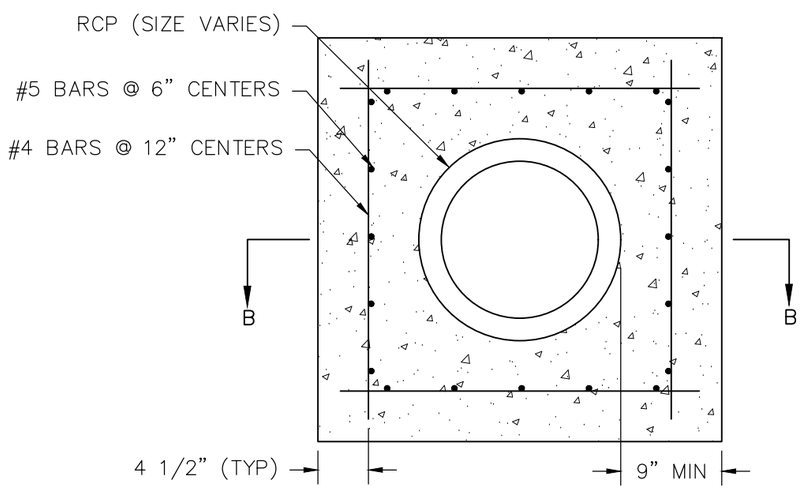

SECTION A–A

CONCRETE PIPE COLLAR DETAILS

NOTES

1. USE KCMMB APPROVED CONCRETE THROUGHOUT
2. REINFORCING STEEL SHALL BE NEW BILLET, MINIMUM GRADE 40 AS PER ASTM A615, AND SHALL BE BENT COLD.
3. ALL DIMENSIONS RELATIVE TO REINFORCING STEEL ARE TO CENTERLINE OF BARS. 2" CLEARANCE SHALL BE PROVIDED THROUGHOUT UNLESS OTHERWISE NOTED. TOLERANCE OF +/– 1/8" SHALL BE PERMITTED.
4. ALL LAP SPLICES NOT SHOWN SHALL BE A MINIMUM OF 40 BAR DIAMETERS IN LENGTH.
5. ALL DOWELS SHALL BE ACCURATELY PLACED AND SECURELY TIED IN PLACE PRIOR TO PLACEMENT OF BOTTOM SLAB CONCRETE. STICKING OF DOWELS INTO FRESH OR PARTIALLY HARDENED CONCRETE WILL NOT BE ACCEPTABLE.
6. ALL REINFORCING STEEL SHALL BE SUPPORTED ON FABRICATED STEEL BAR SUPPORTS AT 3' MAXIMUM SPACING.
7. DO NOT SCALE THESE DRAWINGS FOR DIMENSIONS OR CLEARANCES. ANY QUESTIONS REGARDING DIMENSIONS SHALL BE BOUGHT TO THE ATTENTION OF THE CITY ENGINEER PRIOR TO CONSTRUCTION.

City of Leawood

ENGINEERING SERVICES:
DIVISION OF DESIGN
DEPARTMENT OF PUBLIC WORKS
SURVEYING SERVICES:
DIVISION OF DESIGN
DEPARTMENT OF PUBLIC WORKS

DATE	BY	REVISIONS

DATE: DECEMBER 2010
DESIGNED BY: DWL
DRAWN BY: MS
CHECKED BY: DWL
SCALE: NONE
PROJECT NUMBER: N/A

CONSTRUCTION STANDARDS
CONCRETE COLLAR DETAILS

SHEET NO. 26 | TOTAL SHEETS 43

DRAWING: K:\LEAWOOD STANDARDS\CONSTRUCTION\CONCRETE COLLAR.DWG

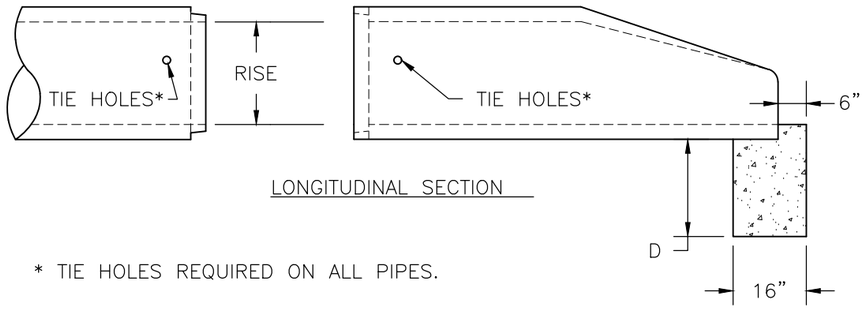

LONGITUDINAL SECTION

* TIE HOLES REQUIRED ON ALL PIPES.

	ARCH		
DIA	RISE	SPAN	D
15"	–	–	18"
18"	13–1/2"	22"	18"
21"	–	–	18"
24"	–	–	24"
27"	–	–	24"
30"	22–1/2"	36–1/4"	24"
36"	25–5/8"	43–3/4"	24"
42"	31–5/16"	51–1/8"	24"
48"	36"	58–1/2"	24"
54"	40"	65"	36"
60"	45"	73"	36"
66"	–	–	36"
72"	54"	88"	36"
84"	62"	102"	36"

NOTES
1. USE KCMMB APPROVED CONCRETE THROUGHOUT.
2. REINFORCING STEEL SHALL BE NEW BILLET, MINIMUM GRADE 40 AS PER ASTM A615, AND SHALL BE BENT COLD.
3. ALL DIMENSIONS RELATIVE TO REINFORCING STEEL ARE TO CENTERLINE OF BARS. 2" CLEARANCE SHALL BE PROVIDED THROUGHOUT UNLESS OTHERWISE NOTED. TOLERANCE of +/– 1/8" SHALL BE PERMITTED.
4. ALL LAP SPLICES NOT SHOWN SHALL BE A MINIMUM OF 40 BAR DIAMETERS IN LENGTH,
5. ALL DOWELS SHALL BE ACCURATELY PLACED AND SECURELY TIED IN PLACE PRIOR TO THE PLACEMENT OF THE BOTTOM SLAB OF CONCRETE. STICKING DOWELS INTO FRESH OR PARTIALLY HARDENED CONCRETE WILL NOT BE ACCEPTABLE.
6. ALL REINFORCING STEEL SHALL BE SUPPORTED ON FABRICATED STEEL BAR SUPPORTS AT A 3' MAXIMUM SPACING.
7. DO NOT SCALE THESE DRAWINGS FOR DIMENSIONS OR CLEARANCES. ANY QUESTIONS REGARDING DIMENSIONS SHALL BE BROUGHT TO THE ATTENTION OF THE CITY ENGINEER PRIOR TO CONSTRUCTION.
8. THE LAST THREE JOINTS OF RCP, INCLUDING THE END SECTION, SHALL BE MECHANICALLY RESTRAINED WHERE DISCHARGING INTO UNIMPROVED SYSTEMS.
9. THE RESTRAINED JOINT HARDWARE SHALL BE HOT DIP ZINC COATED IN ACCORDANCE WITH ASTM A–123.

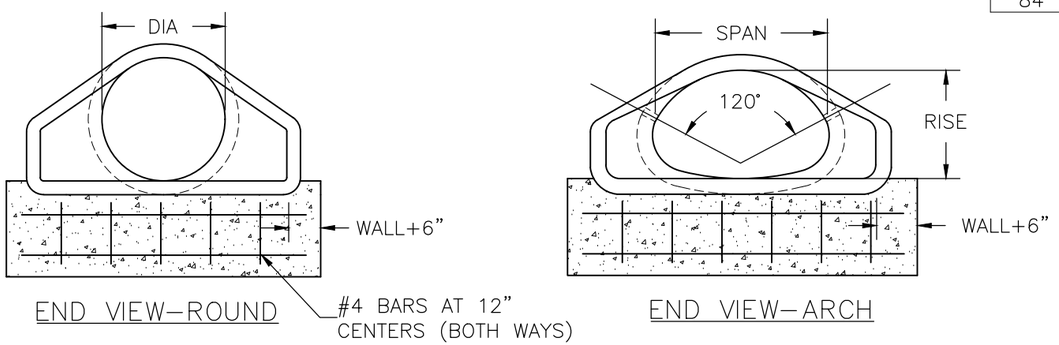

END VIEW–ROUND

END VIEW–ARCH

END SECTION TOE WALL DETAILS

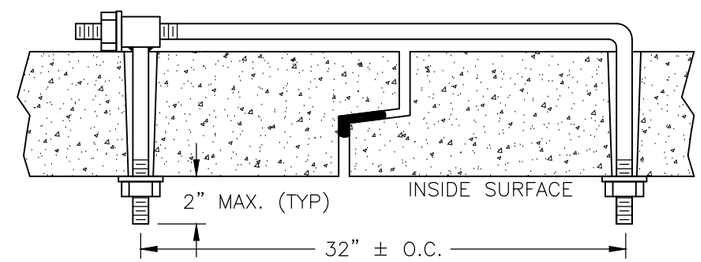

EYE BOLT TIE

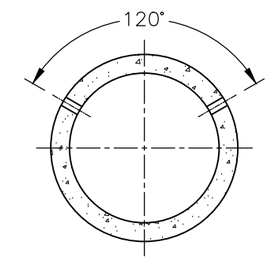

TYPICAL APPLICATION

END SECTION TIE BOLT DETAIL

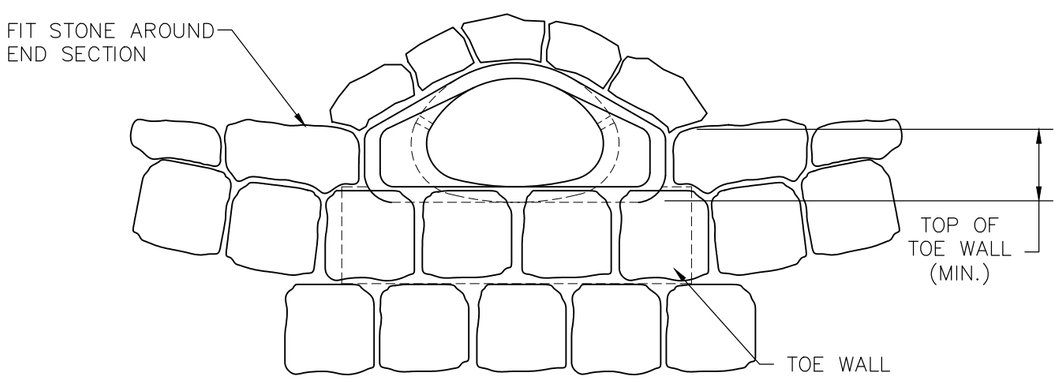

END VIEW

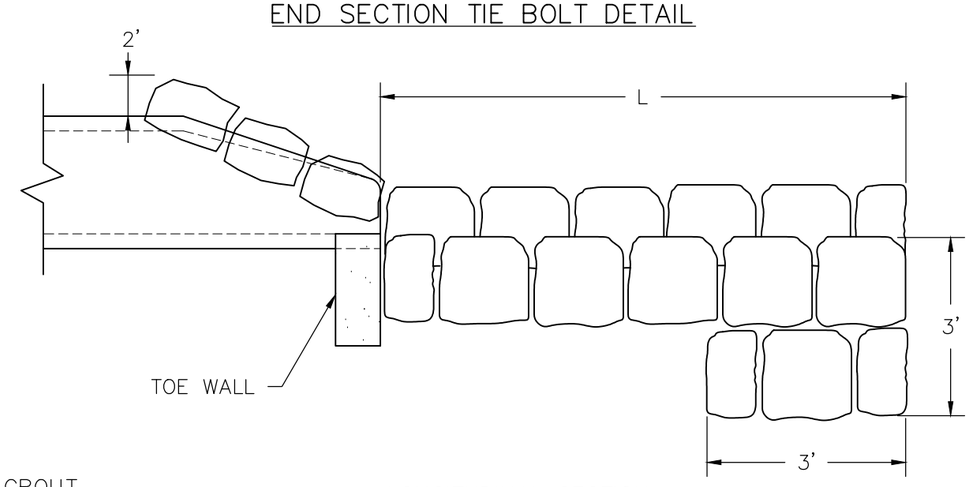

LONGITUDINAL SECTION

NOTES
1. THE STONE WILL HAVE A MINIMUM OF 6 SQUARE FEET SURFACE AREA AND BE 1'–6" THICK.
2. GROUT SHALL BE PLACED IN THE JOINTS TO WITHIN 1" OF THE TOP OF STONE (BROOMING OF GROUT OVER THE STONE WILL NOT BE ACCEPTED).
3. THE CITY MAY REVIEW THE STONE PRIOR TO TESTING TO VERIFY COLOR OF STONE. SOUNDNESS: "FREEZE AND THAW" SHALL BE A MINIMUM OF 0.95 AS DETERMINED IN SECTION 1100 OF KDOT STANDARD SPECIFICATIONS, LOS ANGELES WEAR ABRASION, MAXIMUM OF 40%.

GROUTED STONE DITCH LINING

City of Leawood

ENGINEERING SERVICES: DIVISION OF DESIGN, DEPARTMENT OF PUBLIC WORKS
SURVEYING SERVICES: DIVISION OF DESIGN, DEPARTMENT OF PUBLIC WORKS

REVISIONS	BY	DATE

DATE: DECEMBER 2010
DESIGNED BY: DWL
DRAWN BY: MRS
CHECKED BY: DWL
SCALE: NONE
PROJECT NUMBER: N/A

CONSTRUCTION STANDARDS
END SECTION TOE WALL AND
GROUTED STONE DITCH LINING DETAILS

SHEET NO. 27 | TOTAL SHEETS 43

DRAWING: K:\LEAWOOD STANDARDS\CONSTRUCTION\RESIDENTIAL DRIVEWAY.DWG

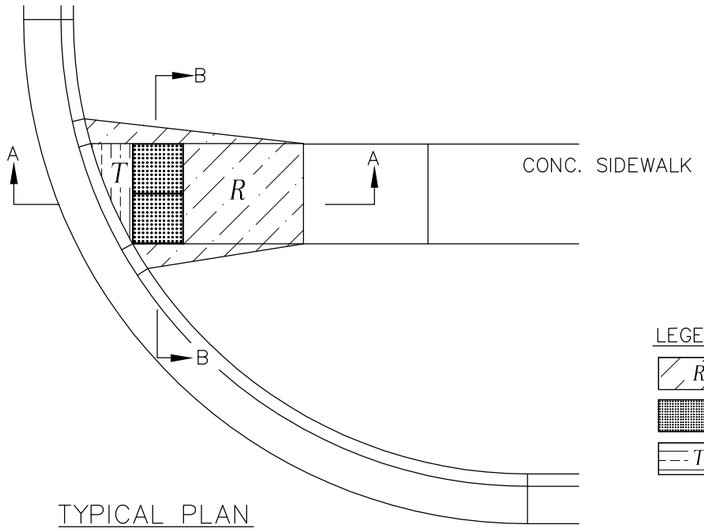

TYPICAL PLAN
NOT TO SCALE

LEGEND:

- R — RAMP
- DETECTABLE WARNING
- T — TRANSITION

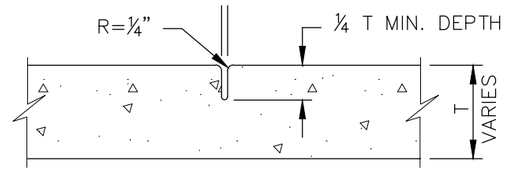

CONTRACTION JOINT

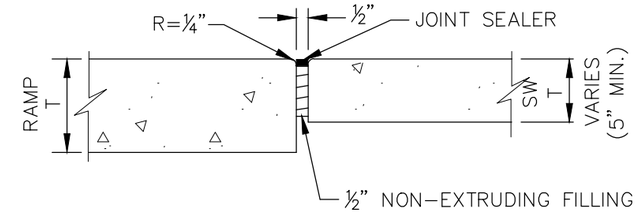

ISOLATION JOINT

JOINT DETAILS
NOT TO SCALE

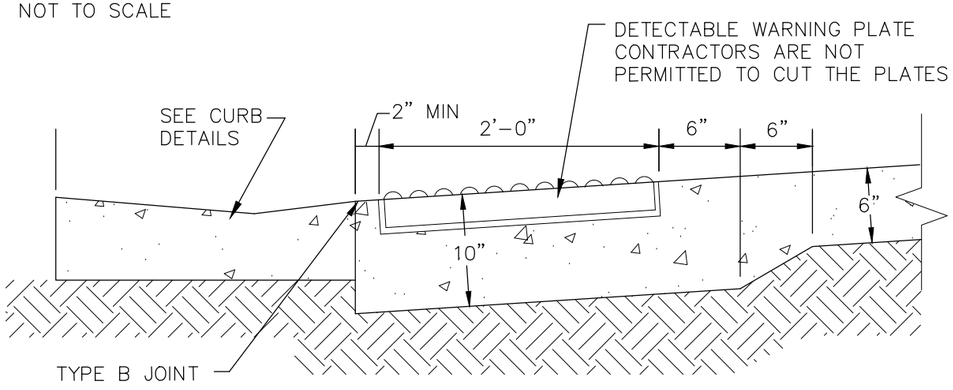

SECTION A–A
NOT TO SCALE

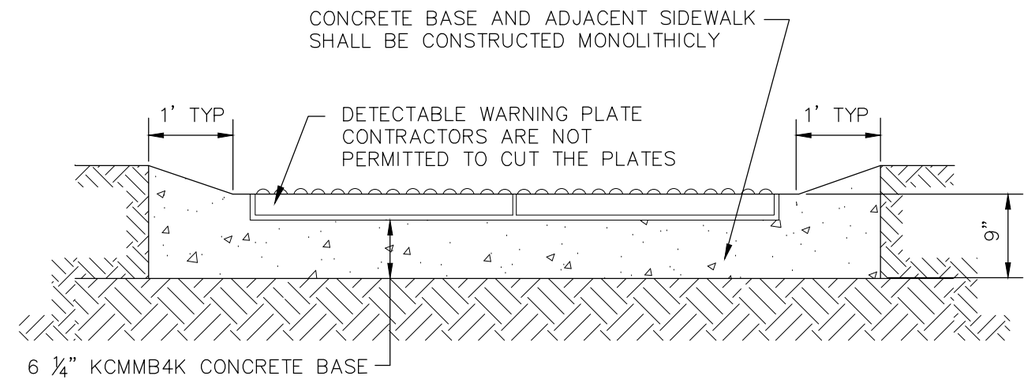

SECTION B–B
NOT TO SCALE

SIDEWALK RAMP NOTES:

1. SIDEWALK RAMP LOCATION DETERMINED FROM THE INTERSECTION OF THE EXTENSION OF BACK OF SIDEWALK AND BACK OF CURB & GUTTER.
2. LONGITUDINAL JOINT SPACING TO MATCH WIDTH OF SIDEWALK.
3. ISOLATION JOINTS SHALL BE PLACED WHERE WALK ABUTS DRIVEWAYS AND SIMILAR STRUCTURES, AND 125' CENTERS MAX.
4. SIDEWALK RAMP SHALL BE LENGTHENED TO PROVIDE ADA COMPLIANCE SLOPE BUT NEED NOT EXCEED 15'.
5. ADA MAXIMUM RAMP SLOPE = 1"/FT. ADA MAXIMUM CROSS SLOPE = 2%.
6. SEE DETECTABLE WARNING DETAIL FOR THE INSTALLATION REQUIREMENTS.
7. DETECTABLE WARNING PLATES SHALL BE DURALAST CAST IRON (NATURAL FINISH)

DRAWING: K:\LEAWOOD STANDARDS\CONSTRUCTION\RESIDENTIAL DRIVEWAY.DWG

City of Leawood

ENGINEERING SERVICES:
DIVISION OF DESIGN
DEPARTMENT OF PUBLIC WORKS

SURVEYING SERVICES:
DIVISION OF DESIGN
DEPARTMENT OF PUBLIC WORKS

REVISIONS	BY	DATE
CAST IRON DETECTABLE WARNING PANELS ONLY	MRS	5/10/18

DATE: DECEMBER 2010
DESIGNED BY: DWL
DRAWN BY: MRS
CHECKED BY: DWL
SCALE: NONE
PROJECT NUMBER: N/A

CONSTRUCTION STANDARDS
GENERAL SIDEWALK ADA RAMP DETAILS

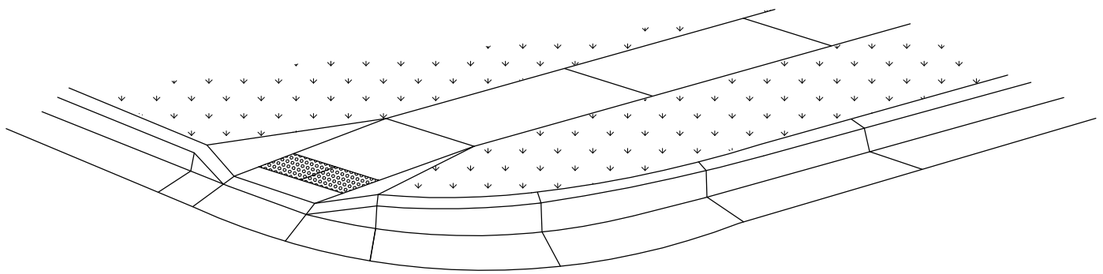

3-D VIEW

NOT TO SCALE

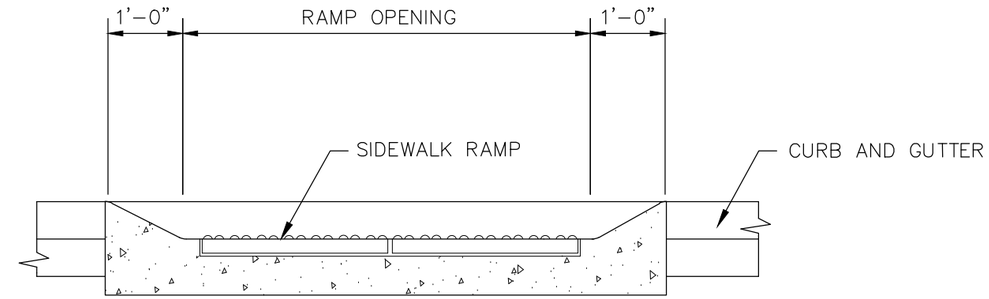

SECTION B-B

NOT TO SCALE

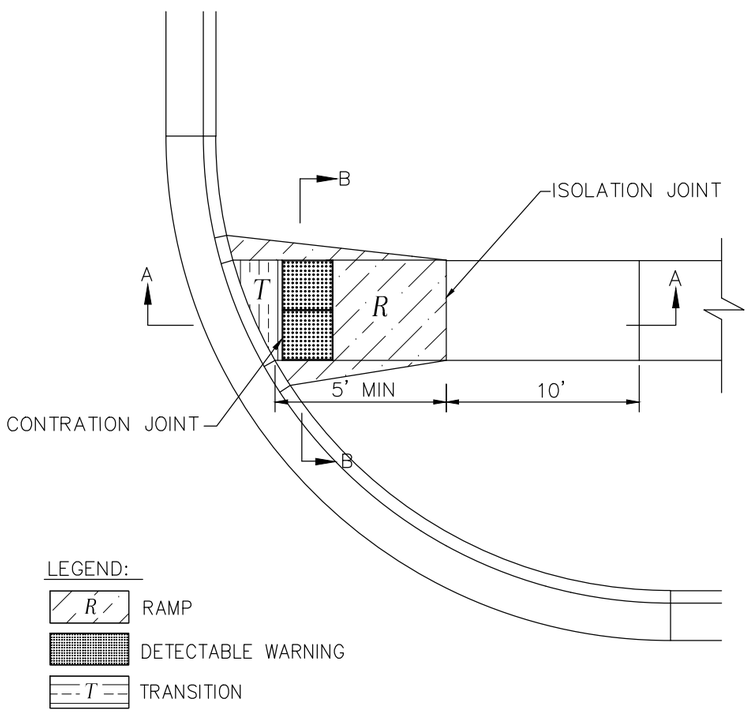

TYPE A SIDEWALK RAMP

NOT TO SCALE

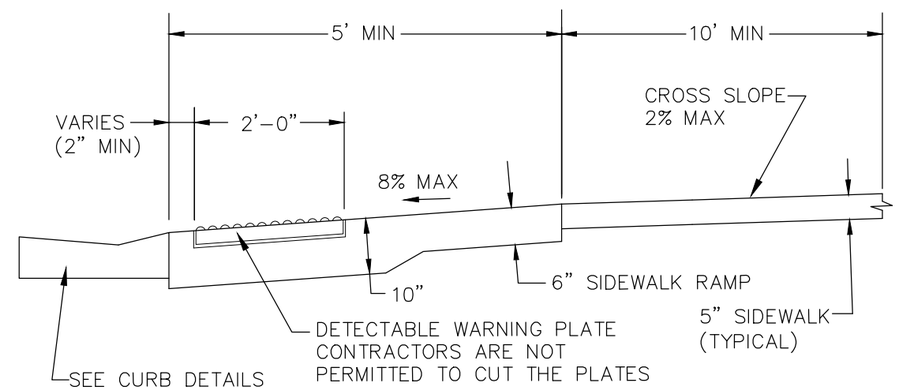

SECTION A-A

NOT TO SCALE

SIDEWALK RAMP NOTES:

1. SIDEWALK RAMP LOCATION DETERMINED FROM THE INTERSECTION OF THE EXTENSION OF BACK OF SIDEWALK AND BACK OF CURB & GUTTER.
2. LONGITUDINAL JOINT SPACING TO MATCH WIDTH OF SIDEWALK.
3. ISOLATION JOINTS SHALL BE PLACED WHERE WALK ABUTS DRIVEWAYS AND SIMILAR STRUCTURES, AND 125' CENTERS MAX.
4. SIDEWALK RAMP SHALL BE LENGTHENED TO PROVIDE ADA COMPLIANCE SLOPE BUT NEED NOT EXCEED 15'.
5. ADA MAXIMUM RAMP SLOPE = 1"/FT. ADA MAXIMUM CROSS SLOPE = 2%.
6. SEE DETECTABLE WARNING DETAIL FOR THE INSTALLATION REQUIREMENTS.
7. DETECTABLE WARNING PLATES SHALL BE DURALAST CAST IRON (NATURAL FINISH)

City of Leawood

ENGINEERING SERVICES:
DIVISION OF DESIGN
DEPARTMENT OF PUBLIC WORKS

SURVEYING SERVICES:
DIVISION OF DESIGN
DEPARTMENT OF PUBLIC WORKS

CAST IRON DETECTABLE WARNING PANELS ONLY	5/10/18	MRS
REVISIONS	DATE	BY

DATE: DECEMBER 2010
DESIGNED BY: DWL
DRAWN BY: MRS
CHECKED BY: DWL
SCALE: NONE
PROJECT NUMBER: N/A

CONSTRUCTION STANDARDS
TYPE A SIDEWALK ADA RAMP DETAILS

SHEET NO. 29 | TOTAL SHEETS 43

DRAWING: K:\LEAWOOD STANDARDS\CONSTRUCTION\RESIDENTIAL DRIVEWAY.DWG

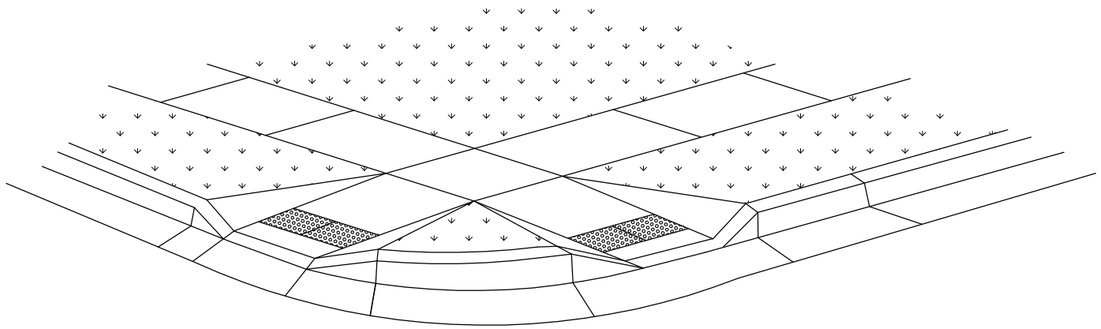

3-D VIEW

NOT TO SCALE

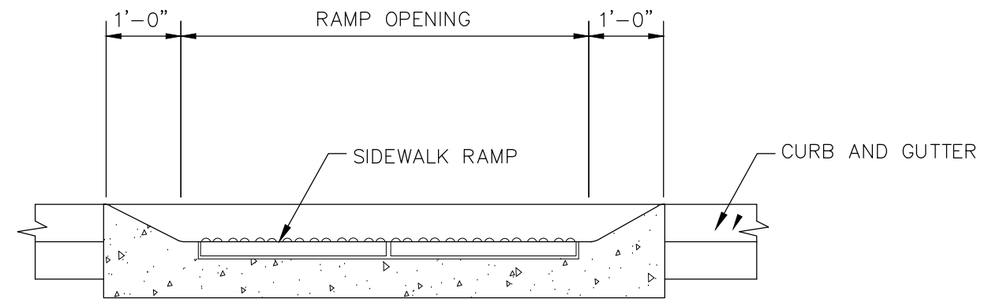

SECTION B-B

NOT TO SCALE

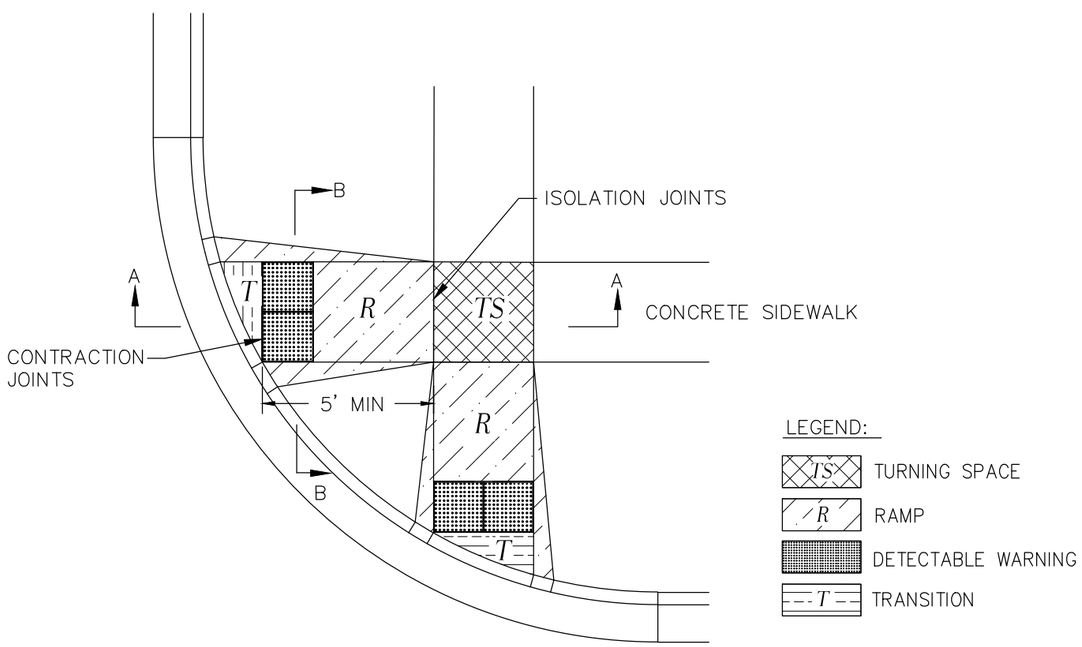

TYPE B SIDEWALK RAMP

NOT TO SCALE

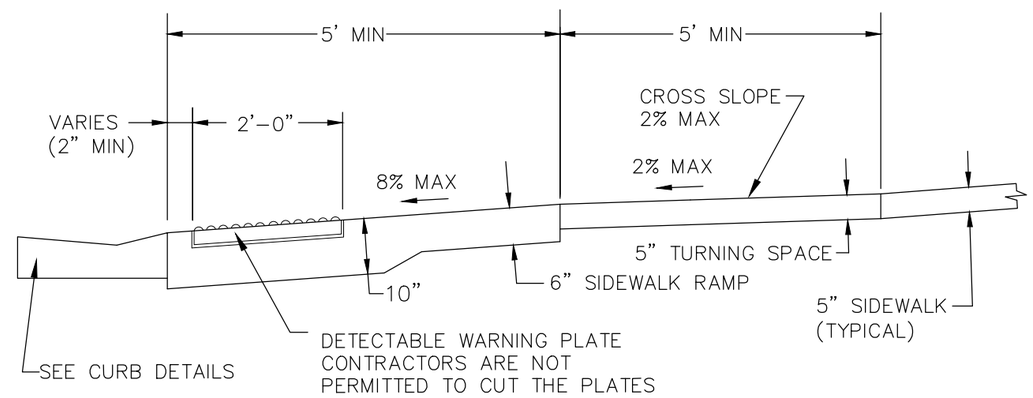

SECTION A-A

NOT TO SCALE

SIDEWALK RAMP NOTES:

1. SIDEWALK RAMP LOCATION DETERMINED FROM THE INTERSECTION OF THE EXTENSION OF BACK OF SIDEWALK AND BACK OF CURB & GUTTER.
2. LONGITUDINAL JOINT SPACING TO MATCH WIDTH OF SIDEWALK.
3. ISOLATION JOINTS SHALL BE PLACED WHERE WALK ABUTS DRIVEWAYS AND SIMILAR STRUCTURES, AND 125' CENTERS MAX.
4. SIDEWALK RAMP SHALL BE LENGTHENED TO PROVIDE ADA COMPLIANCE SLOPE BUT NEED NOT EXCEED 15'.
5. ADA MAXIMUM RAMP SLOPE = 1"/FT. ADA MAXIMUM CROSS SLOPE = 2%.
6. SEE DETECTABLE WARNING DETAIL FOR THE INSTALLATION REQUIREMENTS.
7. DETECTABLE WARNING PLATES SHALL BE DURALAST CAST IRON (NATURAL FINISH)

City of Lakewood

ENGINEERING SERVICES:
DIVISION OF DESIGN
DEPARTMENT OF PUBLIC WORKS

SURVEYING SERVICES:
DIVISION OF DESIGN
DEPARTMENT OF PUBLIC WORKS

REVISIONS	DATE	BY
CAST IRON DETECTABLE WARNING PANELS ONLY	5/10/18	MRS

DATE: DECEMBER 2010
DESIGNED BY: DWL
DRAWN BY: MRS
CHECKED BY: DWL
SCALE: NONE
PROJECT NUMBER: N/A

CONSTRUCTION STANDARDS
TYPE B SIDEWALK ADA RAMP DETAILS

SHEET NO. 30 | TOTAL SHEETS 43

DRAWING: K:\LEAKWOOD STANDARDS\CONSTRUCTION\RESIDENTIAL DRIVEWAY.DWG

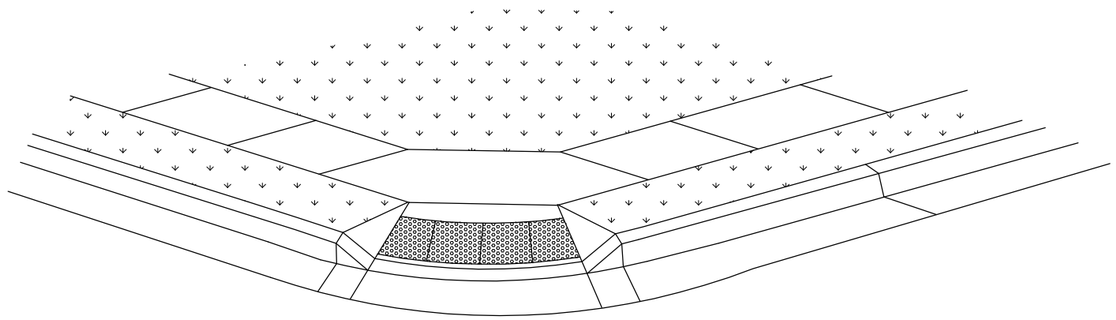

3-D VIEW

NOT TO SCALE

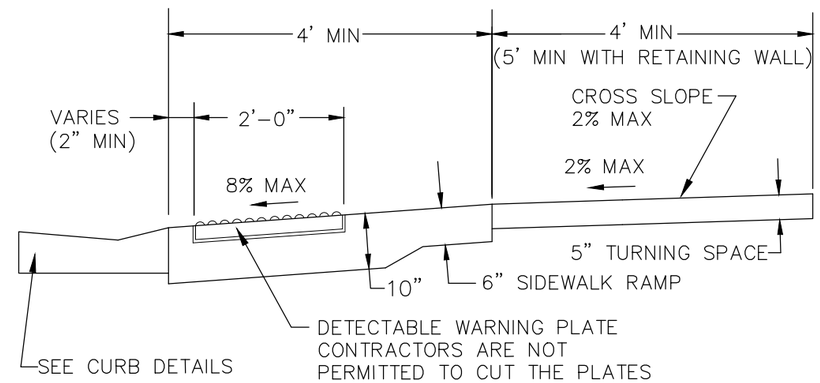

SECTION A-A

NOT TO SCALE

LEGEND:

- TS — TURNING SPACE
- R — RAMP
- DETECTABLE WARNING
- T — TRANSITION

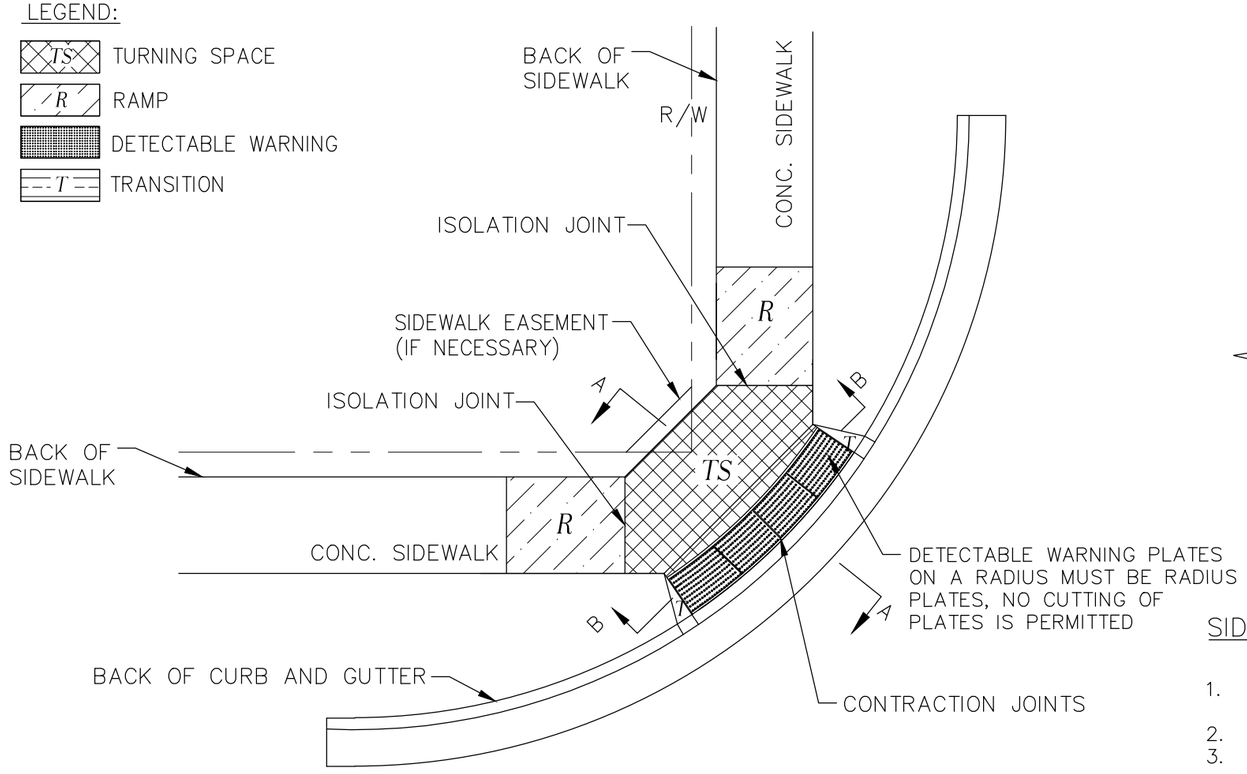

TYPE C SIDEWALK RAMP

NOT TO SCALE

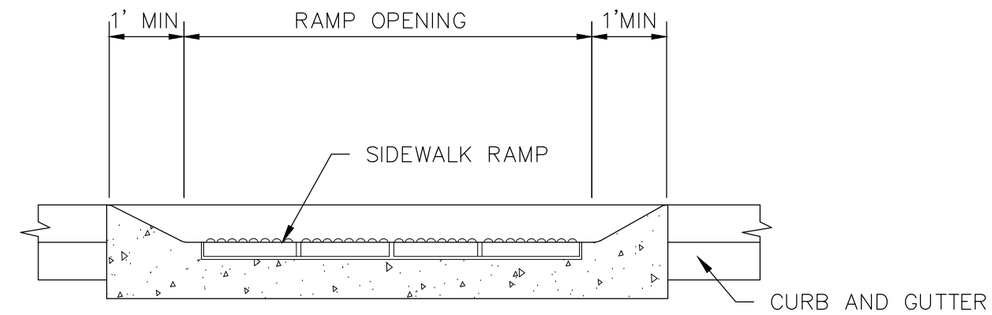

SECTION B-B

NOT TO SCALE

SIDEWALK RAMP NOTES:

1. SIDEWALK RAMP LOCATION DETERMINED FROM THE INTERSECTION OF THE EXTENSION OF BACK OF SIDEWALK AND BACK OF CURB & GUTTER.
2. LONGITUDINAL JOINT SPACING TO MATCH WIDTH OF SIDEWALK.
3. ISOLATION JOINTS SHALL BE PLACED WHERE WALK ABUTS DRIVEWAYS AND SIMILAR STRUCTURES, AND 125' CENTERS MAX.
4. SIDEWALK RAMP SHALL BE LENGTHENED TO PROVIDE ADA COMPLIANCE SLOPE BUT NEED NOT EXCEED 15'.
5. ADA MAXIMUM RAMP SLOPE = 1"/FT. ADA MAXIMUM CROSS SLOPE = 2%.
6. SEE DETECTABLE WARNING DETAIL FOR THE INSTALLATION REQUIREMENTS.
7. DETECTABLE WARNING PLATES SHALL BE DURALAST CAST IRON (NATURAL FINISH)

City of Leawood

ENGINEERING SERVICES:
DIVISION OF DESIGN
DEPARTMENT OF PUBLIC WORKS
SURVEYING SERVICES:
DIVISION OF DESIGN
DEPARTMENT OF PUBLIC WORKS

DATE	BY	REVISIONS
5/10/18	MRS	CAST IRON DETECTABLE WARNING PANELS ONLY

DATE: DECEMBER 2010
DESIGNED BY: DWL
DRAWN BY: MRS
CHECKED BY: DWL
SCALE: NONE
PROJECT NUMBER: N/A

CONSTRUCTION STANDARDS
TYPE C SIDEWALK ADA RAMP DETAILS

SHEET NO. 31 | TOTAL SHEETS 43

DRAWING: K:\LEAWOOD_STANDARDS\CONSTRUCTION\RESIDENTIAL DRIVEWAY.DWG

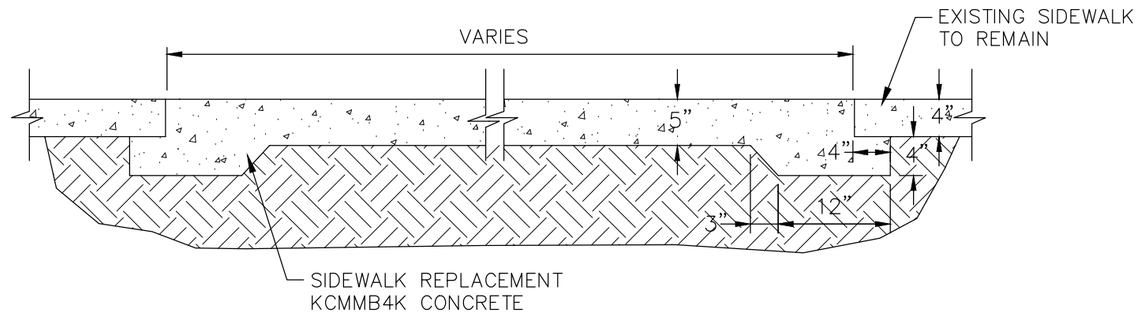

SIDEWALK REPLACEMENT DETAIL
NOT TO SCALE

SIDEWALK NOTES:

1. LONGITUDINAL JOINT SPACING TO MATCH WIDTH OF SIDEWALK.
2. ISOLATION JOINTS SHALL BE PLACED WHERE WALK ABUTS DRIVEWAYS AND SIMILAR STRUCTURES, AND 125' CENTERS MAX.

DRAWING: K:\LEAWOOD STANDARDS\CONSTRUCTION\RESIDENTIAL DRIVEWAY.DWG

City of Leawood

ENGINEERING SERVICES:
DIVISION OF DESIGN
DEPARTMENT OF PUBLIC WORKS
SURVEYING SERVICES:
DIVISION OF DESIGN
DEPARTMENT OF PUBLIC WORKS

REVISIONS	DATE	BY

DATE: DECEMBER 2010
DESIGNED BY: DWL
DRAWN BY: MFS
CHECKED BY: DWL
SCALE: NONE
PROJECT NUMBER: N/A

CONSTRUCTION STANDARDS
SIDEWALK REPAIR DETAILS

SHEET NO. 32 | TOTAL SHEETS 43

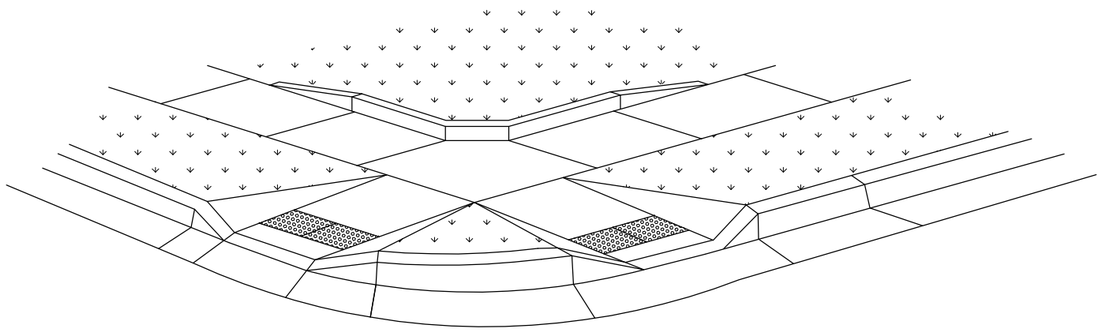

3-D VIEW

NOT TO SCALE

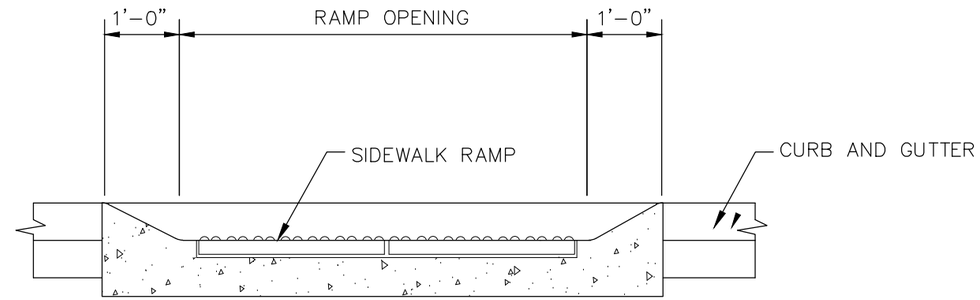

SECTION B-B

NOT TO SCALE

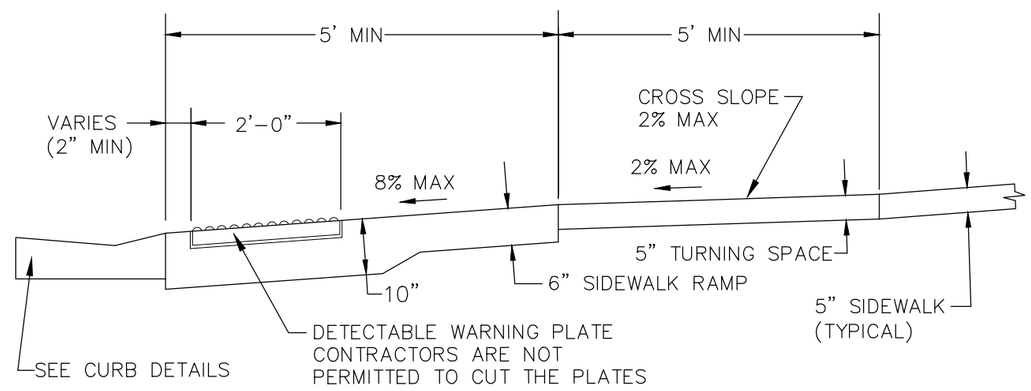

SECTION A-A

NOT TO SCALE

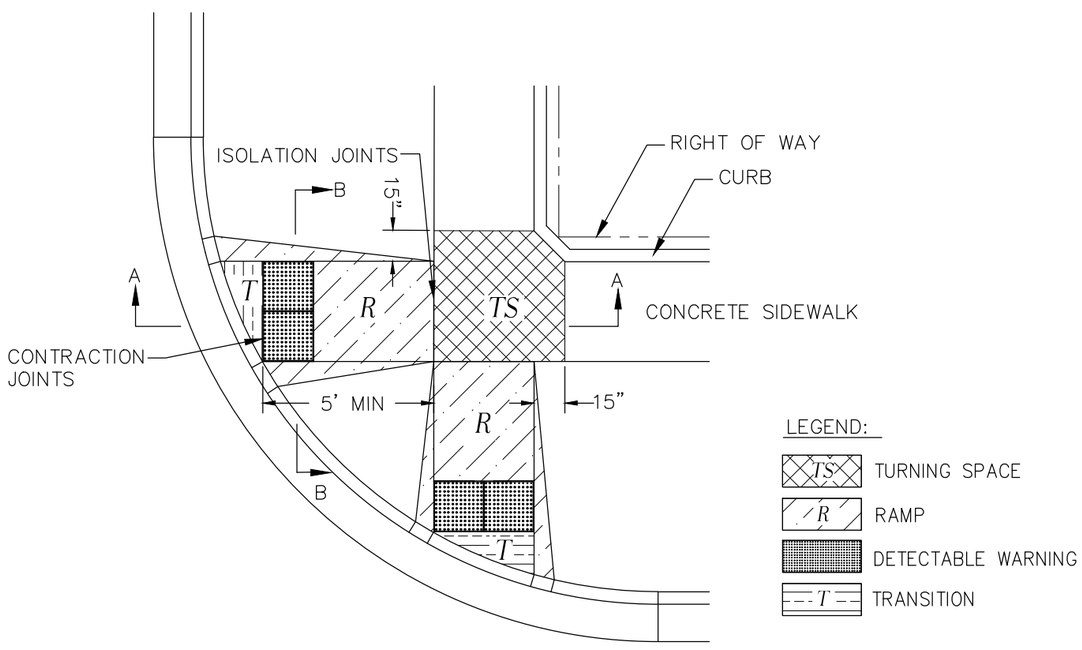

TYPE B SIDEWALK RAMP WITH CURB

NOT TO SCALE

SIDEWALK RAMP NOTES:

1. SIDEWALK RAMP LOCATION DETERMINED FROM THE INTERSECTION OF THE EXTENSION OF BACK OF SIDEWALK AND BACK OF CURB & GUTTER.
2. LONGITUDINAL JOINT SPACING TO MATCH WIDTH OF SIDEWALK.
3. ISOLATION JOINTS SHALL BE PLACED WHERE WALK ABUTS DRIVEWAYS AND SIMILAR STRUCTURES, AND 125' CENTERS MAX.
4. SIDEWALK RAMP SHALL BE LENGTHENED TO PROVIDE ADA COMPLIANCE SLOPE BUT NEED NOT EXCEED 15'.
5. ADA MAXIMUM RAMP SLOPE = 1"/FT. ADA MAXIMUM CROSS SLOPE = 2%.
6. SEE DETECTABLE WARNING DETAIL FOR THE INSTALLATION REQUIREMENTS.
7. DETECTABLE WARNING PLATES SHALL BE DURALAST CAST IRON (NATURAL FINISH)

City of Leawood

ENGINEERING SERVICES:
DIVISION OF DESIGN
DEPARTMENT OF PUBLIC WORKS
SURVEYING SERVICES:
DIVISION OF DESIGN
DEPARTMENT OF PUBLIC WORKS

DATE	BY	REVISIONS
5/10/18	MRS	CAST IRON DETECTABLE WARNING PANELS ONLY

DATE: DECEMBER 2010
DESIGNED BY: DWL
DRAWN BY: MRS
CHECKED BY: DWL
SCALE: NONE
PROJECT NUMBER: N/A

CONSTRUCTION STANDARDS
TYPE B SIDEWALK WITH CURB ADA RAMP DETAILS

SHEET NO. 33 TOTAL SHEETS 43

DRAWING: K:\LEAWOOD STANDARDS\CONSTRUCTION\RESIDENTIAL DRIVEWAY.DWG

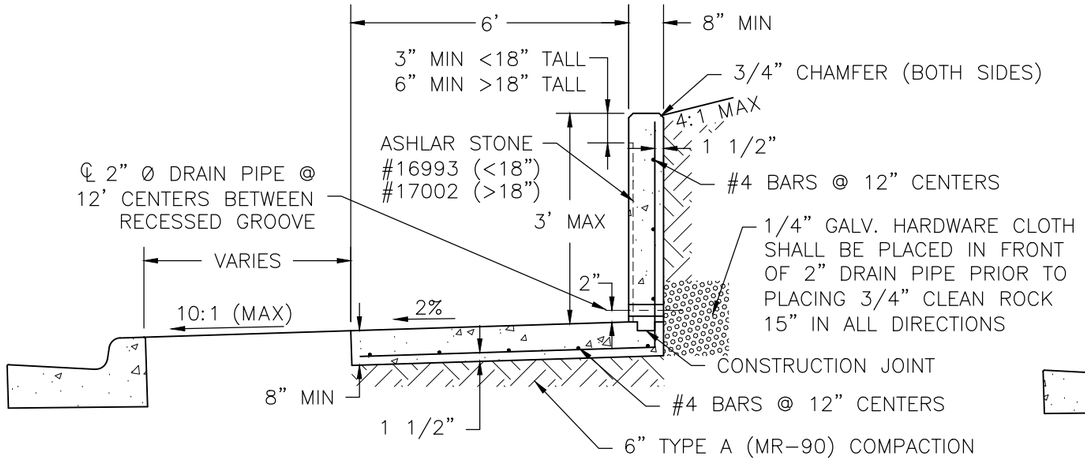

INTEGRAL SIDEWALK AND RETAINING WALL WITH WEEPHOLE

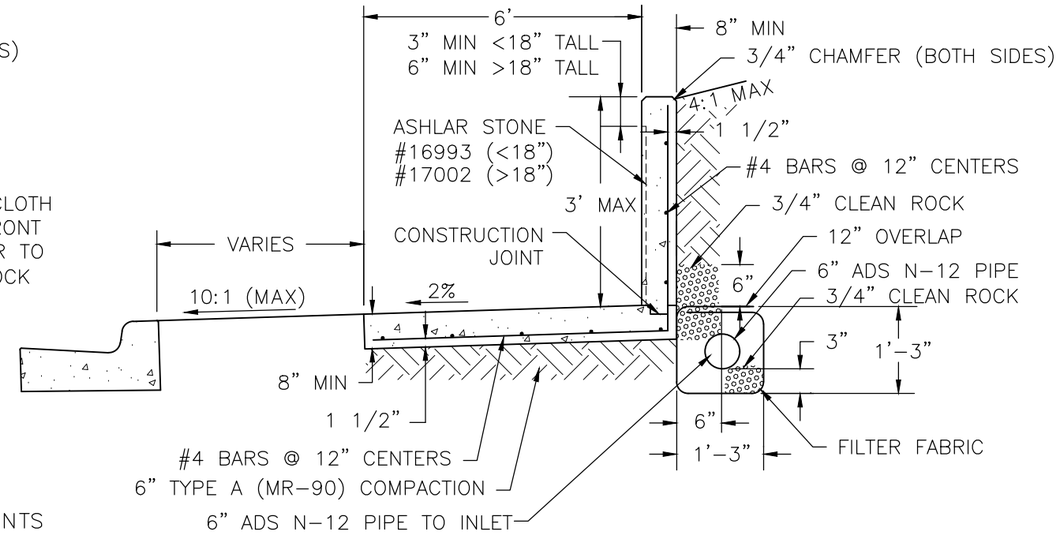

INTEGRAL SIDEWALK AND RETAINING WALL WITH UNDERDRAIN

NOTES

1. USE KCMMB APPROVED CONCRETE THROUGHOUT.
2. ALL VERTICAL FORM EXPANSION AND CONTRACTION JOINTS SHALL ALIGN WITH CONTRACTION JOINTS IN SIDEWALK. VERTICAL FORM EXPANSION JOINTS SHALL HAVE A MAXIMUM SPACING OF 100'.
3. SIDEWALK CONSTRUCTION JOINT SPACING SHALL MATCH THE SIDEWALK JOINT SPACING.
4. KEY ALL CONSTRUCTION JOINTS.
5. ALL EXPOSED WALL FACES SHALL BE HAND FINISHED WITH AN APPROVED GROUT WHILE THE WALL IS GREEN. FORM MARKS SHALL BE REMOVED PRIOR TO FINISHING THE WALL.
6. ALL FORM TIES SHALL BE THE RECESSED TYPE.
7. SIDEWALK AND RETAINING WALL EXPANSION JOINTS SHALL HAVE 5/8" SMOOTH DOWEL ASSEMBLIES WITH GREASED CAPS AT 12" CENTERS MAX.
8. ROCK BACKFILL AND TOPSOIL PLACEMENT SHALL BE CONSIDERED SUBSIDIARY TO INTEGRAL SIDEWALK AND RETAINING WALL CONSTRUCTION.
9. REINFORCING STEEL SHALL BE NEW BILLET, MINIMUM GRADE 40 AS PER ASTM A615, AND SHALL BE BENT COLD.
10. ALL DIMENSIONS RELATIVE TO REINFORCING STEEL ARE TO CENTERLINE OF BARS. 2" CLEARANCE SHALL BE PROVIDED THROUGHOUT UNLESS OTHERWISE NOTED. TOLERANCES OF +/- 1/8" SHALL BE PERMITTED
11. ALL LAP SPLICES NOT SHOWN SHALL BE A MINIMUM OF 40 BAR DIAMETERS IN LENGTH.
12. ALL CONCRETE CONSTRUCTION SHALL MEET THE APPLICABLE REQUIREMENTS OF STANDARD SPECIFICATIONS FOR STATE ROAD AND BRIDGE CONSTRUCTION, KANSAS DEPARTMENT OF TRANSPORTATION, LATEST EDITION, AND SPECIAL PROVISIONS.
13. ALL DOWELS SHALL BE ACCURATELY PLACED AND SECURELY TIED IN PLACE PRIOR TO PLACEMENT OF BOTTOM SLAB CONCRETE. STICKING OF DOWELS INTO FRESH OR PARTIALLY HARDENED CONCRETE WILL NOT BE ACCEPTABLE.
14. ALL REINFORCING STEEL SHALL BE SUPPORTED ON FABRICATED STEEL BAR SUPPORTS AT 3' MAXIMUM SPACING.
15. DO NOT SCALE THESE DRAWING FOR DIMENSIONS OR CLEARANCES. ANY QUESTIONS REGARDING DIMENSIONS SHALL BE BROUGHT TO THE ATTENTION OF THE CITY ENGINEER PRIOR TO CONSTRUCTION.
16. IF USING UNDERDRAIN, IT MUST CONNECT TO STORM SEWER SYSTEM.
17. PROPOSED UNDERDRAIN PIPE LAYOUT, FLOWLINE ELEVATIONS, INLET CONSTRUCTION POINTS, AND DETAILS SHALL BE APPROVED PRIOR TO CONSTRUCTION. THE CONTRACTOR SHALL SUBMIT SHOP DRAWINGS AND MATERIAL TESTS AS REQUIRED FOR APPROVAL BY THE CITY ENGINEER.
18. ALL UNDERDRAIN OUTLET PIPES SHALL HAVE WATERTIGHT JOINTS. ALL OUTLET PIPES SHALL BE TIED TO THE NEAREST STORM SEWER INLET AS APPROVED.
19. ALL UNDERDRAIN PIPES SHALL BE INSTALLED AT A MINIMUM SLOPE OF 1%.
20. ALL FILTER FABRIC USED FOR PIPE UNDERDRAIN CONSTRUCTION SHALL MEET THE REQUIREMENTS OF AASHTO M288 CLASS A OR APPROVED EQUAL.

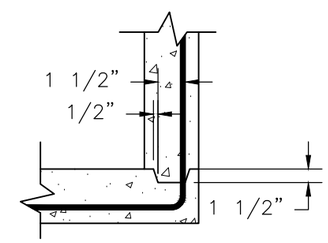

CONSTRUCTION JOINT DETAILS

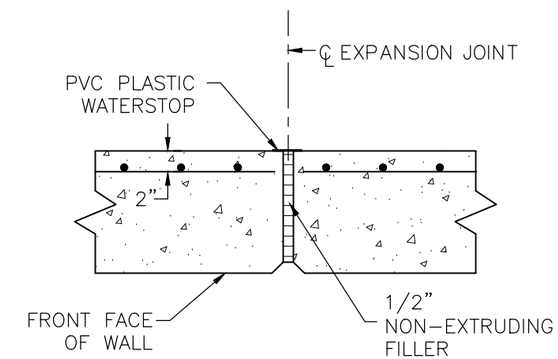

VERTICAL EXPANSION JOINT
(EVERY 100')

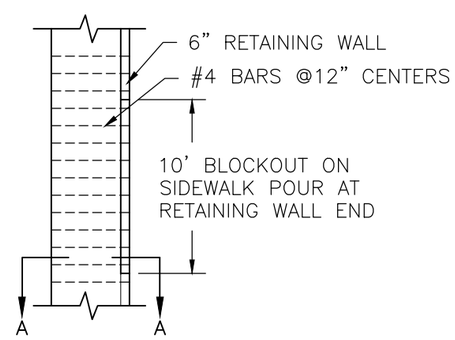

END OF SIDEWALK RETAINING
WALL BLOCKOUT DETAIL

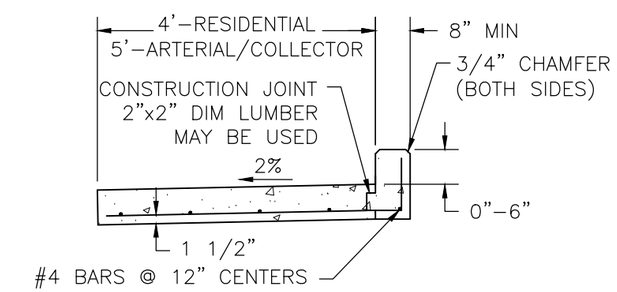

SECTION A-A

INTEGRAL SIDEWALK AND RETAINING WALL DETAIL

DRAWING: K:\LEAWOOD STANDARDS\CONSTRUCTION\RESIDENTIAL DRIVEWAY.DWG

City of Leawood

ENGINEERING SERVICES:
DIVISION OF DESIGN
DEPARTMENT OF PUBLIC WORKS
SURVEYING SERVICES:
DIVISION OF DESIGN
DEPARTMENT OF PUBLIC WORKS

REVISIONS	DATE	BY

DATE: DECEMBER 2010
DESIGNED BY: DWL
DRAWN BY: MRS
CHECKED BY: DWL
SCALE: NONE
PROJECT NUMBER: N/A

CONSTRUCTION STANDARDS
INTEGRAL SIDEWALK AND RETAINING WALL DETAILS

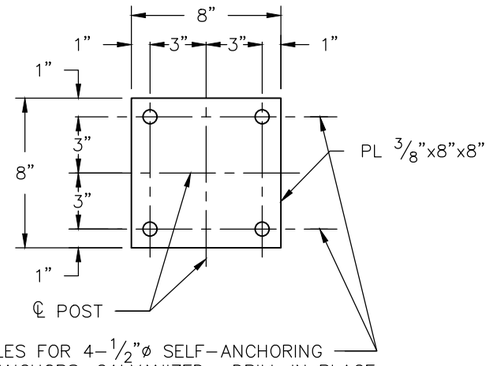

℄ 3/4"ø HOLES FOR 4–1/2"ø SELF–ANCHORING CONCRETE ANCHORS, GALVANIZED. DRILL IN PLACE. EXPOSED PORTIONS OF ANCHORS, ANY NUTS AND WASHERS SHALL BE FIELD PAINTED AFTER INSTALLATION

BASE PLATE DETAIL

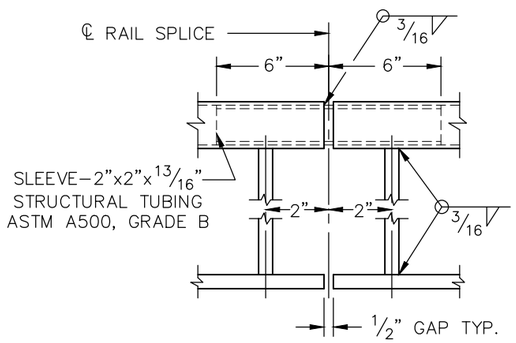

RAIL SPLICE DETAIL

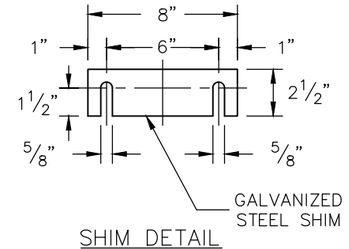

SHIM DETAIL

NOTE: CONTRACTOR SHALL PROVIDE 2–1/16" GALVANIZED STEEL SHIMS FOR EACH POST, TO BE USED AS REQUIRED

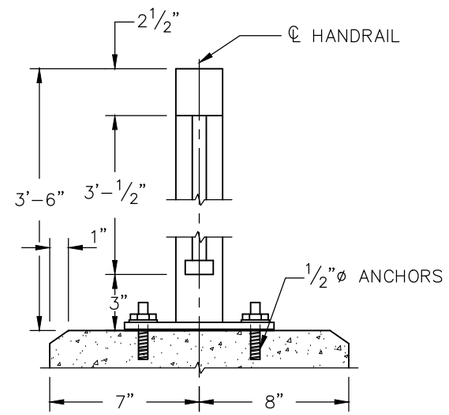

SECTION A–A

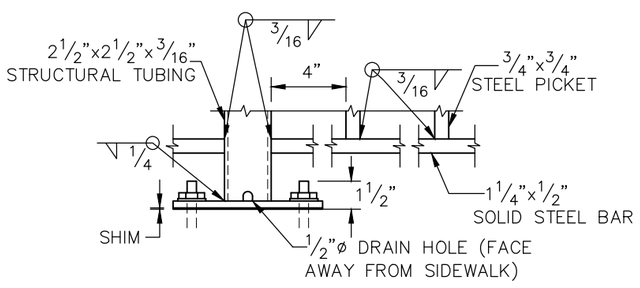

DETAIL C

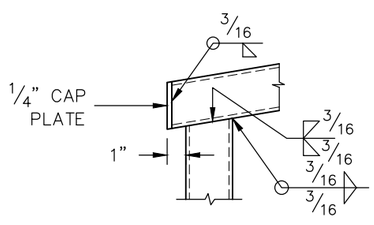

DETAIL B

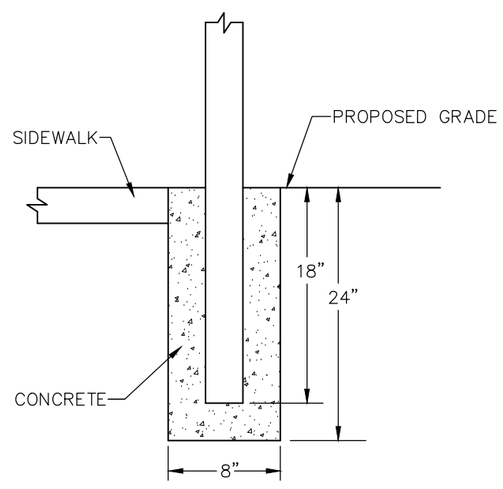

HANDRAIL DETAILS

HANDRAIL NOTES

TOP RAIL SHALL BE 2 1/2"x2 1/2"x3/16" STRUCTURAL TUBING. POSTS SHALL BE 2 1/2"x2 1/2"x3/16" STRUCTURAL TUBING. TUBING FOR TOP RAIL AND POSTS SHALL CONFORM TO ASTM A5000, GRADE B. BOTTOM RAIL, PICKETS AND BASE PLATES SHALL CONFORM TO ASTM A709 (GRADE 36).

ALL RAILS, POSTS, PICKETS, AND BASE PLATES SHALL BE GALVANIZED AND PAINTED (IF REQUIRED) AFTER FABRICATION. GALVANIZING SHALL BE DONE IN ACCORDANCE WITH THE REQUIREMENTS OF THE KDOT SPECIFICATIONS.

RAILS AND BASE PLATES SHALL BE SET PARALLEL TO THE TOP OF THE WALL. ALL POSTS AND PICKETS SHALL BE SET VERTICAL. SHIMS MAY BE USED BETWEEN CONCRETE AND BASE PLATE OF POST.

ALL TOP AND BOTTON RAIL–TO–POST WELD CONNECTIONS SHALL BE GROUND SMOOTH. NO FIELD WELDING WILL BE PERMITTED. THE CONTRACTOR SHALL SUBMIT SHOP DRAWINGS TO THE ENGINNER FOR APPROVAL PRIOR TO FABRICATION OF THE WALL HANDRAIL.

HANDRAIL SHALL BE FABRICATED IN LENGTHS TO INCLUDE A MINIMUM OF TWO AND A MAXIMUM OF THREE SECTIONS. TOP RAIL MEMBERS SHALL BE ATTACHED TO AT LEAST TWO POSTS. CENTER OF RAIL SPLICES SHALL BE LOCATED 1'–9" FROM CENTERLINE OF POSTS UNLESS SHOWN OTHERWISE.

ALL MATERIAL, LABOR, SPLICES, SHIMS, AND INSTALLATION SHALL BE PAID FOR UNDER THE BID ITEM "WALL HANDRAIL." THE WALL HANDRAIL IS TO BE BID ON A LINEAR FOOT BASIS MEASURED FROM END TO END OF TOP RAIL.

THE CONCRETE ANCHORS SHALL BE GALVANIZED AND HAVE A MINIMUM ULTIMATE PULLOUT STRENGTH OF 4,000 POUNDS BASED ON 4,000 PSI CONCRETE. LENGTH OF EMBEDMENT INTO CONCRETE SHALL CONFORM TO MANUFACTURER'S RECOMMENDATIONS.

SHALL BE INSTALLED ANYWHERE THERE IS A 30" OR MORE DROP ADJACENT TO THE WALKWAY.

City of Leawood

ENGINEERING SERVICES:
DIVISION OF DESIGN
DEPARTMENT OF PUBLIC WORKS
SURVEYING SERVICES:
DIVISION OF DESIGN
DEPARTMENT OF PUBLIC WORKS

REVISIONS	BY	DATE

DATE: DECEMBER 2010
DESIGNED BY: DWL
DRAWN BY: HRS
CHECKED BY: DWL
SCALE: NONE
PROJECT NUMBER: N/A

CONSTRUCTION STANDARDS
HANDRAIL DETAILS

SHEET NO.	TOTAL SHEETS
35	43

DRAWING: K:\LEAWOOD STANDARDS\CONSTRUCTION\HANDRAIL.DWG

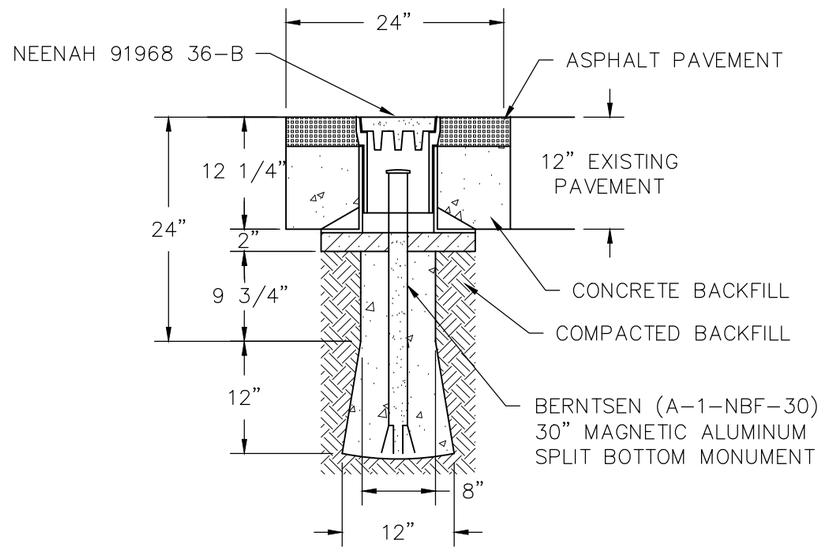

MONUMENT BOX WITH PAVEMENT

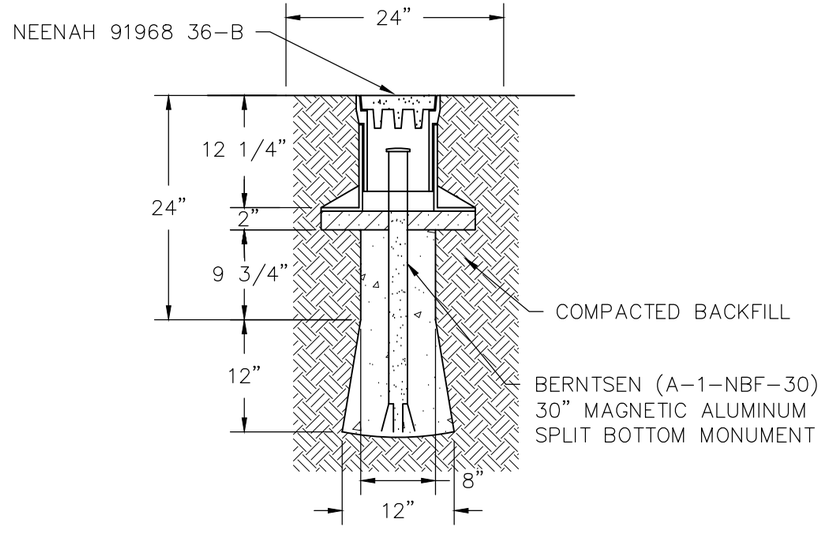

MONUMENT BOX WITH COMPACTED BACKFILL

DRAWING: K:\LEAWOOD STANDARDS\CONSTRUCTION\MONUMENT BOX.DWG

City of Leawood

ENGINEERING SERVICES:
DIVISION OF DESIGN
DEPARTMENT OF PUBLIC WORKS
SURVEYING SERVICES:
DIVISION OF DESIGN
DEPARTMENT OF PUBLIC WORKS

REVISIONS	DATE	BY

DATE: DECEMBER 2010
DESIGNED BY: DWL
DRAWN BY: MRS
CHECKED BY: DWL
SCALE: NONE
PROJECT NUMBER: N/A

CONSTRUCTION STANDARDS
MONUMENT BOX DETAILS

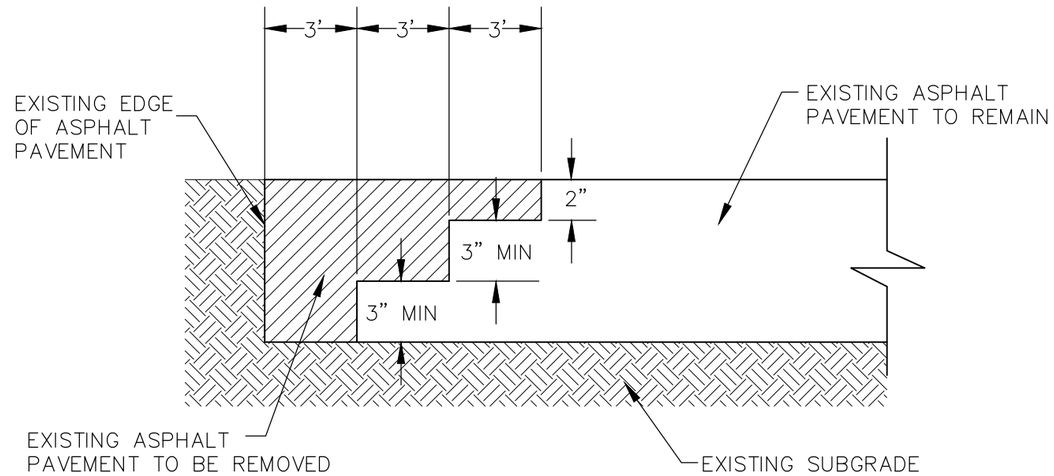

PAVEMENT REMOVAL DETAIL
(AT TRANSVERSE JOINTS)
NOT TO SCALE

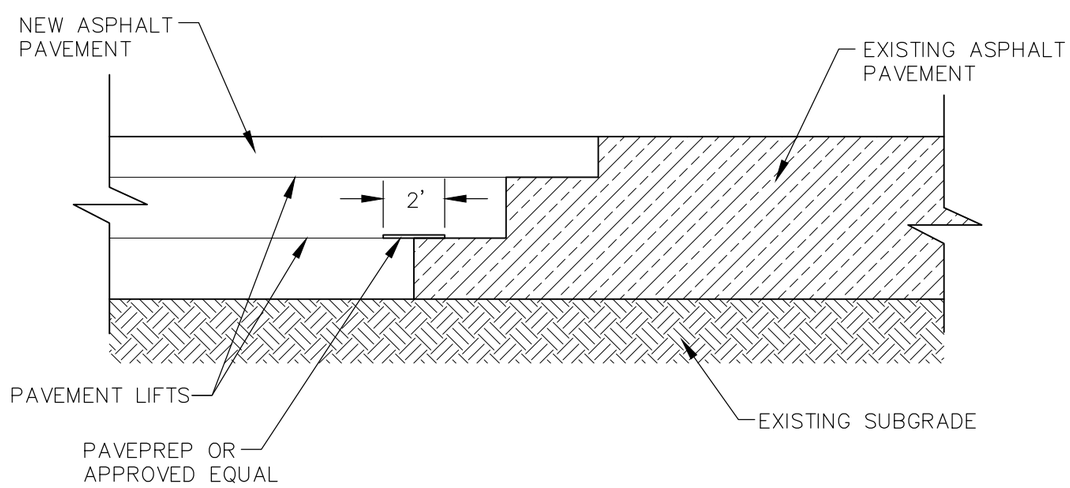

PAVEMENT CONSTRUCTION DETAIL
(AT TRANSVERSE JOINTS)
NOT TO SCALE

DRAWING: K:\LEAWOOD STANDARDS\CONSTRUCTION\STREET EXTENSION DETAIL.DWG

City of Leawood

ENGINEERING SERVICES:
DIVISION OF DESIGN
DEPARTMENT OF PUBLIC WORKS
SURVEYING SERVICES:
DIVISION OF DESIGN
DEPARTMENT OF PUBLIC WORKS

REVISIONS	DATE	BY

DATE: DECEMBER 2010
DESIGNED BY: DWL
DRAWN BY: MRS
CHECKED BY: DWL
SCALE: NONE
PROJECT NUMBER: N/A

CONSTRUCTION STANDARDS
STREET EXTENSION DETAILS

SHEET NO.	TOTAL SHEETS
37	43

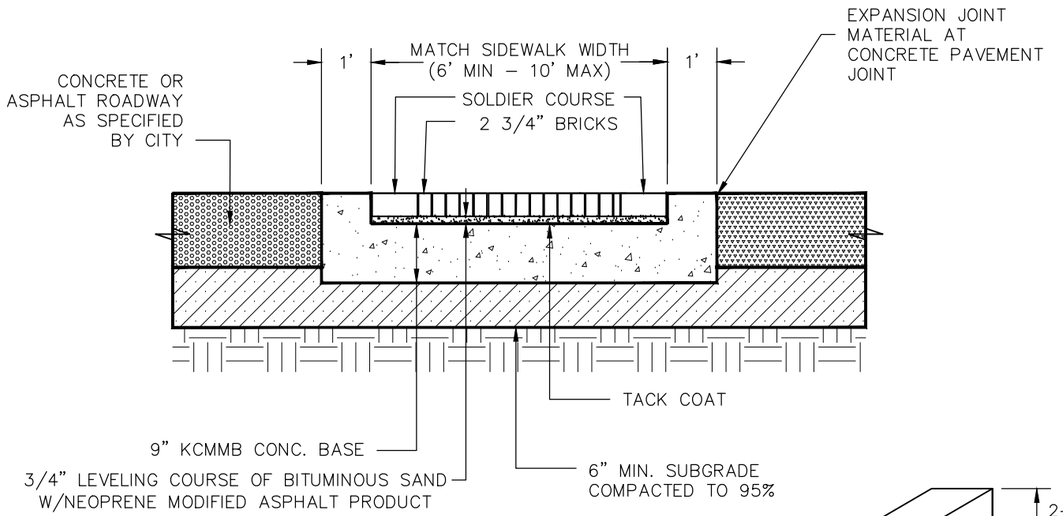

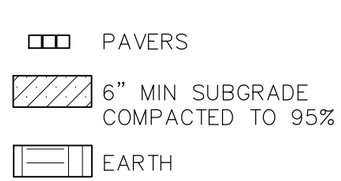

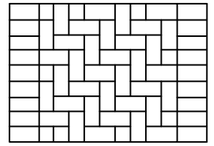

HERRINGBONE PATTERN AND SOLDIER COURSE

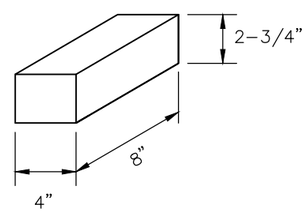

GENERAL NOTES

1. BRICKS SHALL BE RATED FOR ROADWAY TRAFFIC.
2. BRICKS SHALL BE BELDEN REGIMENTAL FULL RANGE 2–3/4" THICK, 4"x8" WITH STABILIZING SAND IN THE JOINTS.
3. BASE SLAB AND EDGE RESTRAINT SHALL BE POURED MONOLITHIC.
4. EXPANSION JOINT MATERIAL WILL BE PLACED AT ALL JOINTS BETWEEN NEW CONCRETE AND EXISTING CONCRETE
5. BITUMEN SETTING BED MATERIALS:
   A. PRIMER FOR BASE: ANIONIC ASPHALT EMULSION SS–1h, PER ASTM D977.
   B. SAND FOR ASPHALT BED:
      1. CLEAN, NON–PLASTIC, FREE FROM DELETERIOUS OR FOREIGN MATTER, SYMMETRICALLY SHAPED, NATURAL OR MANUFACTURED FROM CRUSHED ROCK.
      2. DO NOT USE LIMESTONE SCREENINGS, STONE DUST, OR SAND IN THE BEDDING MATERIAL THAT DOES NOT CONFORM TO THE GRADING REQUIREMENTS.
      3. GRADED ACCORDING TO ASTM C136.
      4. BEDDING SAND MATERIAL REQUIREMENTS: CONFORM TO THE GRADING REQUIREMENTS OF ASTM C33 WITH MODIFICATIONS SHOWN IN TABLE 1.

TABLE 1
GRADING REQUIREMENT FOR BEDDING SAND
ASTM C33

SIEVE SIZE	PERCENT PASSING
NO 4	100
NO 8	85 TO 100
NO 16	50 TO 85
NO 30	25 TO 60
NO 50	10 TO 30
NO 100	2 TO 10
NO 200	2 TO 10

6. ASPHALT CEMENT: HEATED TO 300°F, 7% ASPHALT MIXED WITH 93% SAND IN BATCHES 145 POUNDS ASPHALT TO 1855 POUNDS SAND. EXACT PROPORTIONS TO BE DETERMINED BY CONTRACTOR.
7. NOEPRENE MODIFIED ASPHALT ADHESIVE: KARNAK 230 2% NEO–ASPHALT PAVING BLOCK ADHESIVE.

PAVER SIDEWALK CROSSING DETAIL

DRAWING: K:\LEAWOOD STANDARDS\CONSTRUCTION\RESIDENTIAL DRIVEWAY.DWG

City of Leawood

ENGINEERING SERVICES:
DIVISION OF DESIGN
DEPARTMENT OF PUBLIC WORKS
SURVEYING SERVICES:
DIVISION OF DESIGN
DEPARTMENT OF PUBLIC WORKS

DATE	BY	REVISIONS

DATE: DECEMBER 2010
DESIGNED BY: DML
DRAWN BY: MRS
CHECKED BY: DML
SCALE: NONE
PROJECT NUMBER: N/A

CONSTRUCTION STANDARDS
PAVER SIDEWALK CROSSING DETAIL

SHEET NO. 38 | TOTAL SHEETS 43

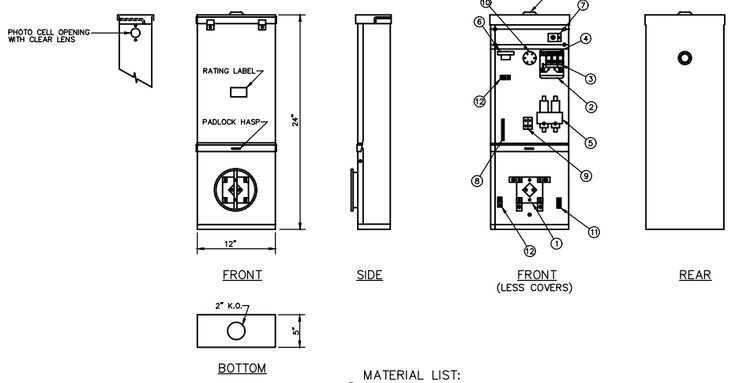

MATERIAL LIST:

1. 100 AMP. 4-JAW METER SOCKET.
2. 100 AMP. 4-CIRCUIT INTERIOR.
3. 20 A. 1-POLE CIRC. BREAKER, "CONTROL".
4. 30 A. 2-POLE CIRC. BREAKER, "LIGHTING".
5. 30 A. 2-POLE MERCURY CONTACTOR, 120 V. COIL.
6. PHOTO CELL RECEPTACLE.
7. 2-POSITION "AUTO-TEST" SWITCH.
8. 100 AMP. BONDABLE NEUTRAL.
9. 70 AMP. TERMINAL BLOCK.
10. 1 1/2" CAP-OFF.
11. NEUTRAL LUG.
12. GRD. LUG (2).
13. BLANK HUB.
14. HINGED DEAD FRONT (NOT SHOWN)

POLE MOUNTED CONTROLLER

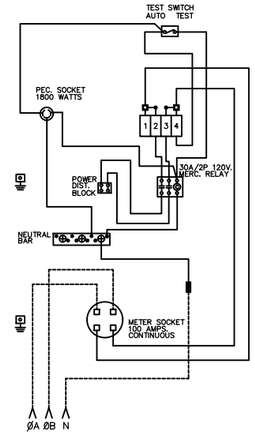

WIRING DIAGRAM

CIRCUIT DIRECTORY			
NO.	DESCRIPTION	AMP	POLE
2-3	CIRCUIT BREAKER	30	2
4	PE-CONTROL	20	1

SERVICE CONNECTION NOTES:

1.) KCP&L TO INSTALL SECONDARY POWER SERVICE THROUGH CONTRACTOR INSTALLED 2" PVC CONDUIT (30" DEEP) WITH PULLSTRING TO WITHIN 18" MIN. – 24" MAX OFF THE BASE OF THE SERVICE POINT. PULLSTRINGS TO BE PROVIDED FOR K.C.P&L INSTALLED SECONDARY CABLE.
2.) THE END OF THE CONDUIT SHALL BE LEFT TEMPORARILY EXPOSED UNTIL KCP&L COMPLETES THE SERVICE HOOK-UP. A LIGHTED BARRICADE SHALL BE PLACED AT THE EXCAVATION.

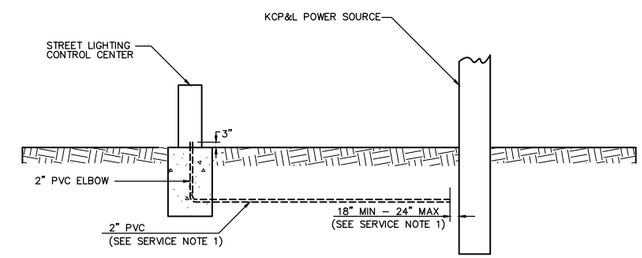

STREET LIGHTING SERVICE CONNECTION DETAILS

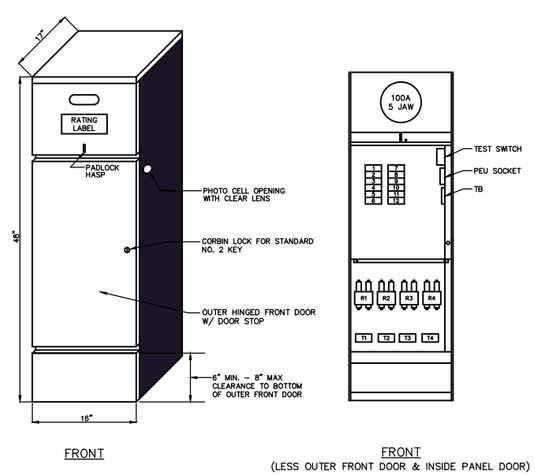

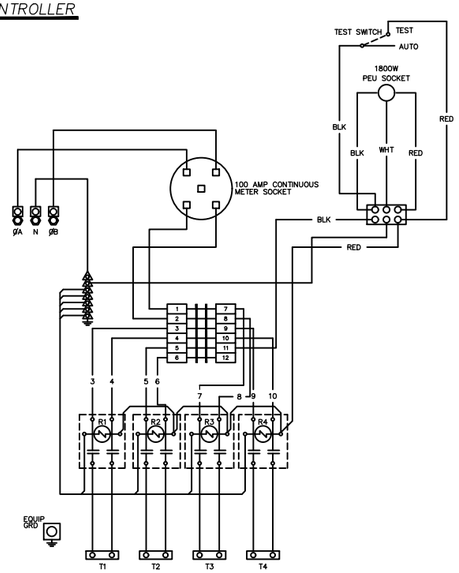

WIRING DIAGRAM

PAD MOUNTED CONTROLLER

CONTROLLER NOTES:

1) ENCLOSURE TO BE CODE 0.125 INCH CORROSION RESISTANT ALUMINUM BUILT TO U.L. SPECIFICATIONS.
2) ALL FACTORY INSTALLED WIRE TO BE COPPER.
3) ALL TERMINALS APPROVED FOR COPPER OR ALUM. WIRE.
4) SILVER-PLATED COPPER BUSSED CIRCUIT BREAKER INTERIOR.
5) PADLOCK PROVISIONS.
6) FINISH: NATURAL ALUMINUM
7) CONTRACTOR TO PROVIDE GROUND ROD(S) AS REQUIRED FOR MAXIMUM OF 25 OHMS RESISTANCE TO GROUND.

CIRCUIT DIRECTORY				
NO.	DESCRIPTION	QTY	AMP	POLE
1,2	MAIN	1	100	2
3,4	BRKR. 1	1	30	2
5,6	BRKR. 2	1	30	2
7,8	BRKR. 3	1	30	2
9,10	BRKR. 4	1	30	2
11	BRKR. 5	1	15	1
12	DUPLEX RECPT.	1	20	1
R1	RELAY 1	1	30	2
R2	RELAY 2	1	30	2
R3	RELAY 3	1	30	2
R4	RELAY 4	1	30	2

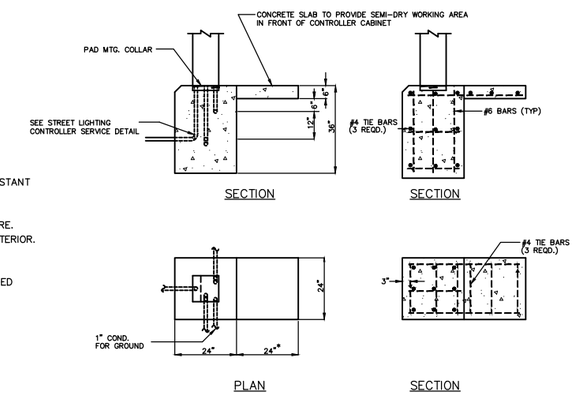

CONCRETE FOUNDATION

* NOTE:
SEE THE PLAN SHEETS FOR SPECIFIC DETAILS (i.e. PAD SIZE, CONDUIT REQUIREMENTS FOR CIRCUIT CABLES) FOR EACH INDIVIDUAL CONTROL CENTER.

City of Leawood

ENGINEERING SERVICES: DIVISION OF DESIGN. DEPARTMENT OF PUBLIC WORKS
SURVEYING SERVICES: DIVISION OF DESIGN. DEPARTMENT OF PUBLIC WORKS

REVISIONS	DATE	BY

DATE: SEPTEMBER 1999
DESIGNED BY: DWL
DRAWN BY: CLM
CHECKED BY: DWL
SCALE: NONE

SUBDIVISION NAME
STREET LIGHT CONTROLLER DETAILS

SHEET NO. 39 | TOTAL SHEETS 43

XREF DRAWING:

DRAWING: M:\LEAWOOD STANDARDS\STREET LIGHTS\DWG\CONTROLLER.DWG

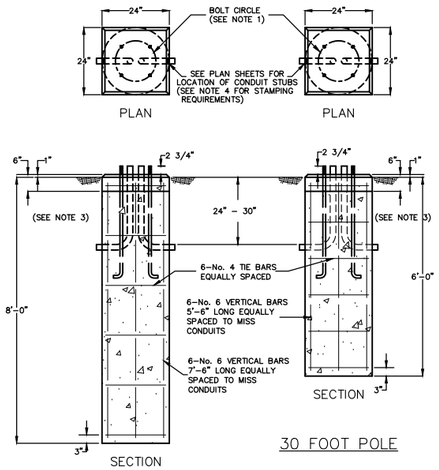

30 FOOT POLE

40 FOOT POLE

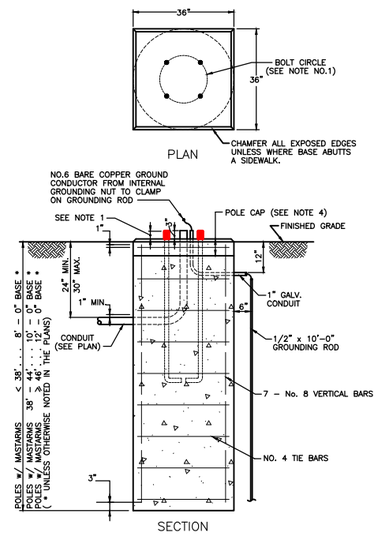

COMBINATION LIGHTING/SIGNAL POLE BASE

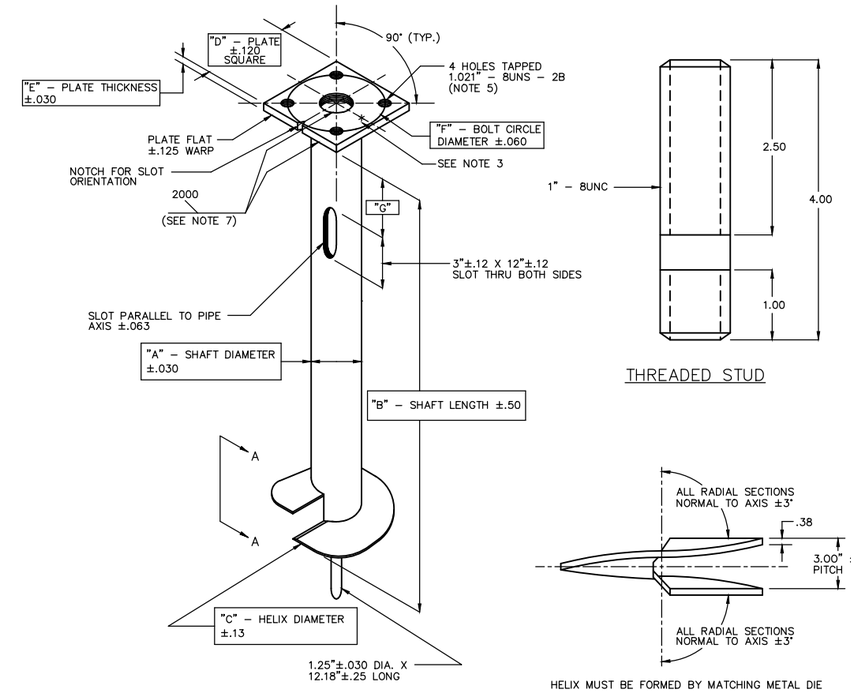

SCREW–IN FOUNDATION

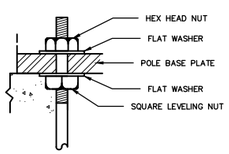

ANCHOR BOLT DETAIL FOR COMBINATION LIGHTING / SIGNAL POLE

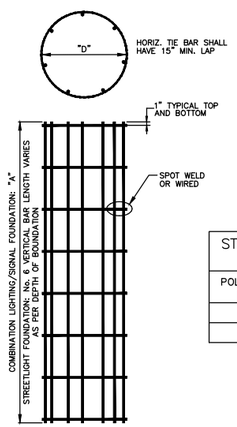

REBAR CAGE DETAIL

STREETLIGHT FOUNDATION HORIZONTAL REBAR		
POLE FND. DIA.	REBAR CIR. "D"	SIZE
24"	20"	No. 4
24"	20"	No. 4

COMBINATION LIGHTING/SIGNAL POLE HORIZONTAL REBAR		
POLE FND. DIA.	REBAR CIR. "D"	SPACING
24"	20"	12" MAX.
36"	30"	12" MAX. EXCEPT FOR 12'–0" BASE WHICH SHALL BE 9" MAX.

COMBINATION LIGHTING/SIGNAL POLE VERTICAL REBAR	
POLE FOUNDATION DEPTH	LENGTH "A"
8'–0"	7'–8"
10'–0"	9'–8"
12'–0"	11'–8"

MOUNTING HEIGHT	ARM SPECIFICATION	MAXIMUM TORQUE RATING (lbs ft)	A SHAFT DIA.	B SHAFT LENGTH	C HELIX DIA.	D PLATE SIZE	E PLATE THICKNESS	F BOLT CIRCLE	G SLOT LOCATION
30'	SINGLE/TWIN	20,000	8"	60"	14"	12"	1.0"	11.0"	18"
40'	SINGLE								
40'	TWIN	20,000	8"	60"	14"	15"	1.25"	14.5"	18"

NOTES:

1. FINAL POLE, ANCHOR BOLT SIZE, ANCHOR BOLT PROJECTION AND BOLT CIRCLE SHALL BE AS PER MANUFACTURER'S RECOMMENDED PRACTICES. ALL ANCHOR BOLTS SHALL BE SET ACCORDING TO FACTORY CERTIFIED TEMPLATES OR DRAWINGS FOR POLES TO BE INSTALLED.
2. ALL CONCRETE POLE BASES SHALL BE CONSOLIDATED BY AN INTERNAL TYPE VIBRATOR.
3. FINAL 6" OF CONCRETE FOUNDATION POLE CAP SHALL BE FORMED SQUARE. FOR THE COMBINATION LIGHTING/SIGNAL POLE, THE CAP SHALL BE FORMED AND POURED AFTER THE MASTARM IS ERECTED AND THE POLE IS PLUMB.
4. FOLLOWING CONCRETE PLACEMENT OF THE FINAL 6" OF THE FOUNDATION, THE CONCRETE SHALL BE "STAMPED" BY METHODS APPROVED BY THE INSPECTOR TO INDICATE THE CONDUIT ORIENTATION.

CONCRETE FOUNDATION DETAILS

NOTES:

1. FINISH: HOT DIP GALVANIZE PER ASTM–A153 (LATEST REVISION).
2. BASEPLATE TO BE PERPENDICULAR TO SHAFT AXIS (±1°) AND HOLE AND CONCENTRIC (±.188 I.D. FIM) TO SHAFT AXIS.
3. ALL BASES SHALL BE IDENTIFIED BY THE MANUFACTURER NAME, ABREVIATION, OR SYMBOL ENGRAVED ON THE SHAFT AND/OR TOP PLATE. THE ANCHOR TYPE (R, T1, T2, F1 & F2) SHALL BE ENGRAVED INTO THE TOP PLATE WITH 1/4" TO 1/2" LETTERING.
4. PILOT POINT AND SHAFT AXES TO BE CONCENTRIC (±.125 FIM) AND IN LINE (±2°).
5. TAP 1" HOLES ON THE SPECIFIED BOLT CIRCLE PERPENDICULAR TO THE BASEPLATE. CLEAN AND CHASE THE THREADS AFTER HOT–DIP GALVANIZING SO THAT A BOLT MAY BE HAND INSTALLED.
6. PREHEAT (ROOM TEMPERATURE 70°F), TUMBLEBLAST, HANDGRIND, AND CLEAN BASEPLATE, HELIX, AND CORE ON ALL WELDED AREAS.
7. FLAMECUT IRREGULARITIES PERMISSIBLE:
   (1) VALLEYS NOT TO EXCEED 3/32 IN. BELOW NOMINAL SURFACE LEVEL.
   (2) PEAKS OR POSITIVE IRREGULARITIES NOT TO EXCEED 1/32 IN. ABOVE NOMINAL SURFACE LEVEL OR INTERSECTIONS OF NOMINAL SURFACES.
8. MANUFACTURER TO HAVE IN EFFECT INDUSTRY RECOGNIZED WRITTEN QUALITY CONTROL FOR ALL MATERIALS AND MANUFACTURING PROCESSES.
9. ALL MATERIAL IS TO BE NEW, UNUSED AND MILL TRACEBLE MEETING THE FOLLOWING SPECIFICATIONS:

   BASEPLATE: ASTM A36–(LATEST REVISION) HOT ROLLED STEEL PLATE

   SHAFT: STEEL PIPE PILES, SEAMLESS OR STRAIGHT WELDED, GRADE 2 PER ASTM A252. ALTERNATE MATERIAL: STEEL PIPE TYPE E OR S, GRADE B PER ASTM A53.

   HELIX: ASTM A635–(LATEST REVISION) HOT ROLLED STEEL PLATE

   PILOT POINT: ASTM A575–(LATEST REVISION) HOT ROLLED STEEL

   STUD: AISI C 1045 HOT ROLLED STEEL. SPECIAL 1" DIAMETER HOT DIP GALVANIZED STUD THREADED AT BOTH ENDS. STUD SHALL INCLUDE ONE HEX NUT AND ONE EACH LOCK AND FLAT WASHER FOR THE TYPE B SCREW–IN FOUNDATION.
10. ALL 30' AND 40' ALUMINUM LIGHT POLES SHALL BE FURNISHED WITH BREAKAWAY COUPLING ASSEMBLIES.

City of Leawood

ENGINEERING SERVICES: DIVISION OF DESIGN. DEPARTMENT OF PUBLIC WORKS
SURVEYING SERVICES: DIVISION OF DESIGN. DEPARTMENT OF PUBLIC WORKS

REVISIONS	DATE	BY

DATE: SEPTEMBER 1999
DESIGNED BY: DWL
DRAWN BY: CLM
CHECKED BY: DWL
SCALE: NONE

SUBDIVISION NAME
STREET LIGHT POLE FOUNDATION DETAILS

SHEET NO. 40 | TOTAL SHEETS 43

XREF DRAWING:

DRAWING: M:\LEAWOOD STANDARDS\STREET LIGHTS\DWG\FOUNDATION.DWG

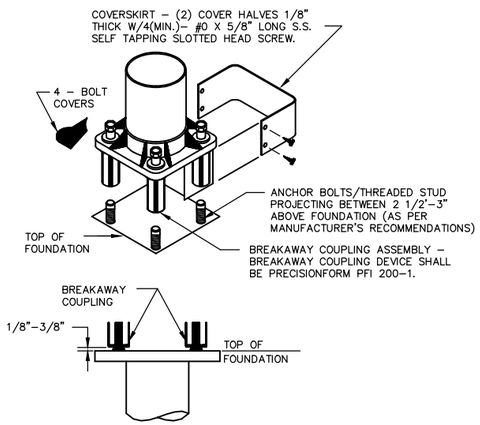

BREAKAWAY COUPLING INSTALLATION *

* SHALL BE AS PER MANUFACTURER'S RECOMMENDED PROCEDURES.

BREAKAWAY COUPLING ASSEMBLY & COVERSKIRT

ALL 30' & 40' POLES SHALL BE FURNISHED WITH BREAKAWAY COUPLINGS OR BREAKAWAY BASE ASSEMBLIES.

MATERIAL DATA

Component	Aluminum Alloy Designation	Specification
Shoe Base	356–T6, Cast	ASTM B26 or B108
Breakaway Couplings	6061–T6, Extruded	1985 AASHTO
Skirt (Breakaway Coupling Assembly)	3003–H14, Sheet	ASTM B209
Bolt Covers	356 or 360, Cast	ASTM B26 or B108
Pole Shaft	6063–T6, Extruded	ASTM B221 or B241
Gound Lug	6061–T5 or 6063–T6, Plate	ASTM B221
Reinforced Handhole Frame	356–T6 or 6061–T6	ASTM B26, B208 or B221
Handhole Cover	6063–T6	ASTM B209, B221 or B241
Luminaire Arm & Tubing Pipes *	6063–T6	ASTM B221, B241 or B429
Luminaire Arm Plate	6061–T6 or 6063–T6 Extruded	ASTM B221
Luminaire Arm Strut* & Arm Connector*	6061–T6 or 6063–T6 Extruded	ASTM B221, B241 or B429
Pole Cap	356, Cast	ASTM B26 or B108
Anchor Bolts	NA	ASTM A–576 Steel, Galvanized per ASTM A–153

*TRUSS–TYPE LUMINAIRE ARMS (TYPE B) ONLY.

NOTES:
1) POLE SHAFT SHALL HAVE A SATIN GROUND FINISH.
2) ALL HARDWARE (BOLTS, NUTS, WASHERS BUT NOT INCLUDING ANCHOR BOLTS) NOT OTHERWISE SPECIFICIALY DESIGNATED IN THE SPECIFICATIONS OR DETAILS SHALL BE ALUMINUM OR 300–SERIES PASSIVATED STAINLESS STEEL.
3) ANCHOR BOLTS–GALV. STEEL ANCHOR BOLTS WITH 50,000 PSI MINIMUM YIELD; TOP 10" MIN. GALVANIZED; INC. ONE NUT EACH AND TWO FLAT WASHERS GALVANIZED TO ASTM A–153 STANDARDS (4 BOLTS, 4 NUTS, & 8 WASHERS TO BE PROVIDED WITH EACH POLE). ANCHOR BOLTS SHALL BE USED WITH CONCRETE FOUNDATIONS–THREADED STUD (SEE POLE FOUNDATION DETAIL SHEET) SHALL BE USED WITH SCREW–IN FOUNDATION ANCHOR.
4) ALL WELDING IS TO BE DONE WITH 4043 WELD WIRE. ALL ARMS AND SHAFTS ARE TO BE HEAT–TREATED TO T6 TEMPER AFTER WELDING.

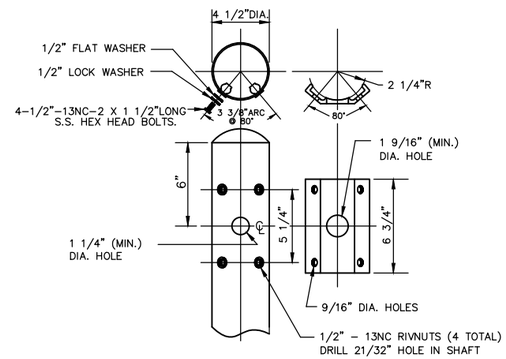

TYPE A – SINGLE MEMBER ARM

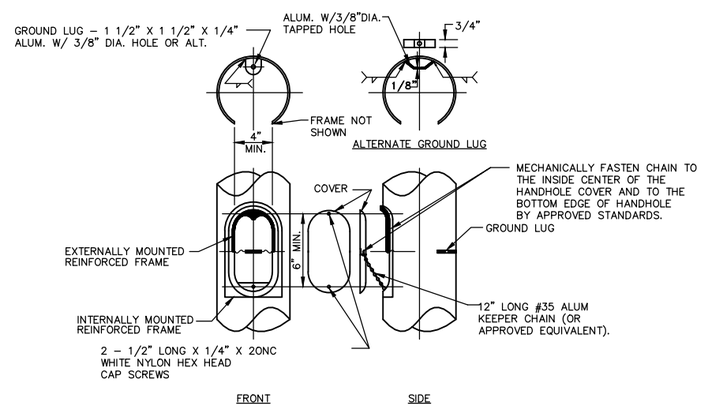

HANDHOLE

TABLE 1 – LUMINAIRE ARM, POLE, SHOE BASE & ANCHOR BOLT DATA

Designation	Mounting Height (A)	Luminaire Arm(s)			Pole Shaft				Shoe Base		Anchor Bolt		
		Length (B)		Type	Base O.D.	Top O.D.	Min. Wall Thickness	Shaft Length (C)	Square (S)	Bolt Circle (BC)	Diameter	Length	Hook
		Arm 1	Arm 2										
30–A–6	30	6	–	A	7"	4.5"	0.188"	27'–6"	10.50"	11.00"	1.00" 8NC	36"	4"
30–A–8	30	8	–	A	7"	4.5"	0.188"	27'–6"	10.50"	11.00"	1.00" 8NC	36"	4"
30–B–10	30	10	–	B	8"	6.0"	0.188"	26'–8"	11.25"	11.00"	1.00" 8NC	36"	4"
30–A–6–6	30	6	6	A	8"	4.5"	0.188"	27'–6"	11.25"	11.00"	1.00" 8NC	36"	4"
30–A–8–8	30	8	8	A	8"	4.5"	0.188"	27'–6"	11.25"	11.00"	1.00" 8NC	36"	4"
30–B–10–10	30	10	10	B	8"	6.0"	0.219"	26'–8"	11.25"	11.00"	1.00" 8NC	36"	4"
40–A–6	40	6	–	A	8"	4.5"	0.219"	37'–6"	11.25"	11.00"	1.00" 8NC	36"	4"
40–A–8	40	8	–	A	8"	4.5"	0.219"	37'–6"	11.25"	11.00"	1.00" 8NC	36"	4"
40–B–10	40	10	–	B	8"	6.0"	0.219"	36'–8"	14.00"	11.00"	1.00" 8NC	48"	4"
40–B–12	40	12	–	B	8"	6.0"	0.219"	36'–8"	14.00"	11.00"	1.00" 8NC	48"	4"
40–B–15	40	15	–	B	8"	6.0"	0.219"	36'–8"	14.00"	11.00"	1.00" 8NC	48"	4"
40–B–8–12	40	8	12	B	10"	6.0"	0.219"	36'–8"	14.00"	14.50"	1.00" 8NC	48"	4"
40–B–12–12	40	12	12	B	10"	6.0"	0.219"	36'–8"	14.00"	14.50"	1.00" 8NC	48"	4"
40–B–15–15	40	15	15	B	10"	6.0"	0.219"	36'–8"	14.00"	14.50"	1.00" 8NC	48"	4"

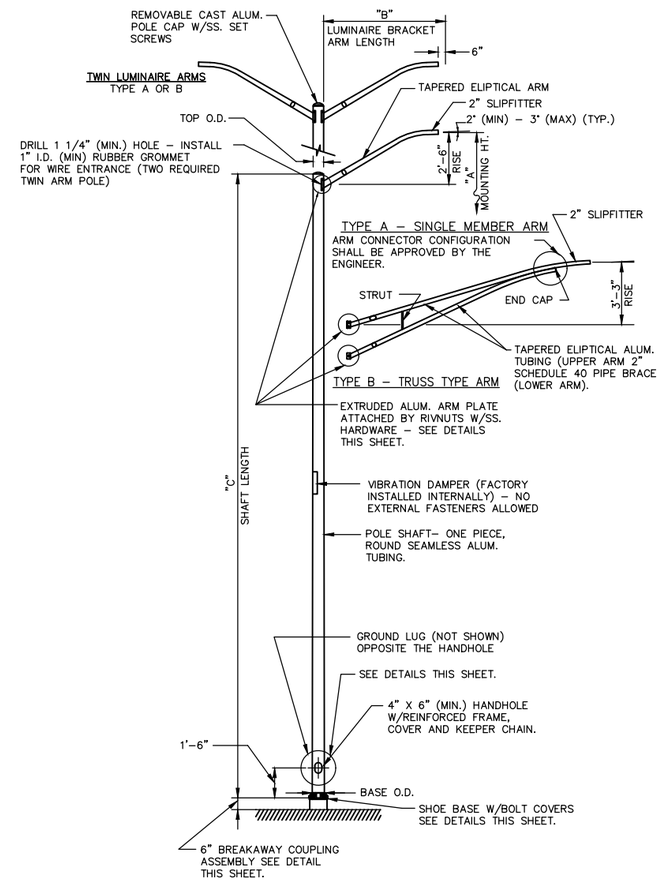

30' & 40' POLE ELEVATION
(SEE TABLE 1 FOR DESIGNATIONS & DIMENSIONS)

GENERAL NOTES:

1) ALL POLES, ARMS, AND MISCELLANEOUS EQUIPMENT SHALL CONFORM TO THESE DETAILS AND AS SPECIFIED IN THE LATEST EDITION OF THE STREET LIGHTING SPECIFICATION. THE POLES AND ARMS SHALL BE DIMENSIONED TO ENABLE INTERCHANGEABILITY.
2) THE ALUMINUM LIGHTING STANDARD INCLUDING ANCHORAGE WITH LUMINAIRE PROPERLY INSTALLED SHALL BE IN ACCORDANCE WITH THE 1985 AMERICAN ASSOCIATION OF HIGHWAY AND TRANSPORTATION OFFICIALS (AASHTO) FOR 80 MPH WIND AND A LUMINAIRE SIZE OF 1.3 SQ. FT. MIN. EFECTIVE PROJECTED AREA WEIGHING 55 LB. MIN.

NOTES:

1) THE INTENT OF THESE MATERIAL RESTRICTIONS IS TO PROVIDE INTERCHANGEABILITY OF BOTH TYPES OF LUMINAIRE ARMS FOR MOUNTING ON EITHER THE 30' OR 40' POLE.
2) ANCHOR BOLTS/THREADED STUDS SHALL PROJECT ABOVE THE FOUNDATION AS PER MANUFACTURER'S RECOMMENDED PRACTICES – 2.5" TO 3".

City of Leawood

ENGINEERING SERVICES: DIVISION OF DESIGN. DEPARTMENT OF PUBLIC WORKS
SURVEYING SERVICES: DIVISION OF DESIGN. DEPARTMENT OF PUBLIC WORKS

REVISIONS	DATE	BY

DATE: SEPTEMBER 1999
DESIGNED BY: DWL
DRAWN BY: CJM
CHECKED BY: DWL
SCALE: NONE

SUBDIVISION NAME
STREET LIGHT POLE DETAILS

SHEET NO. 41 | TOTAL SHEETS 43

XREF DRAWING:

DRAWING: M:\LEAWOOD STANDARDS\STREET LIGHTS\DWG\POLE.DWG

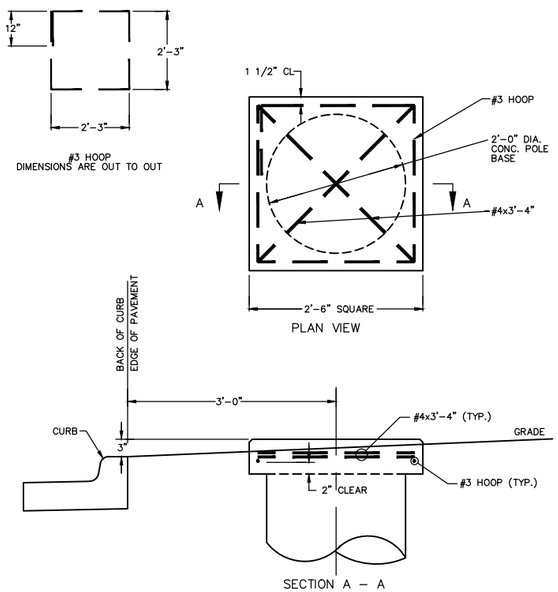

LIGHTING POLE BASE TOP DETAIL

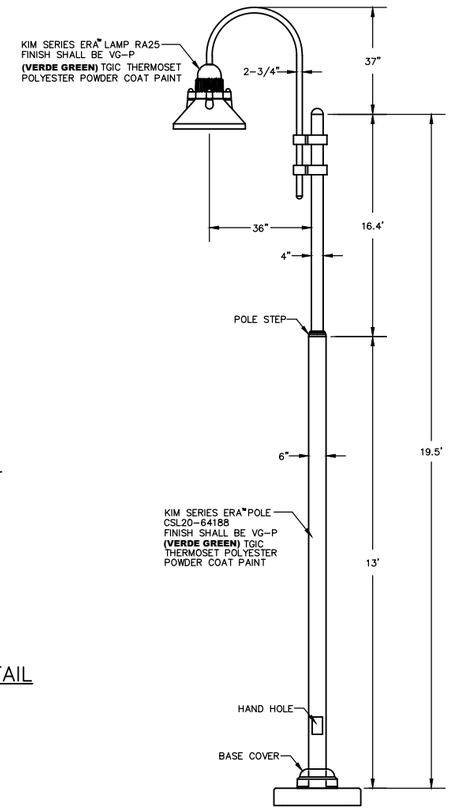

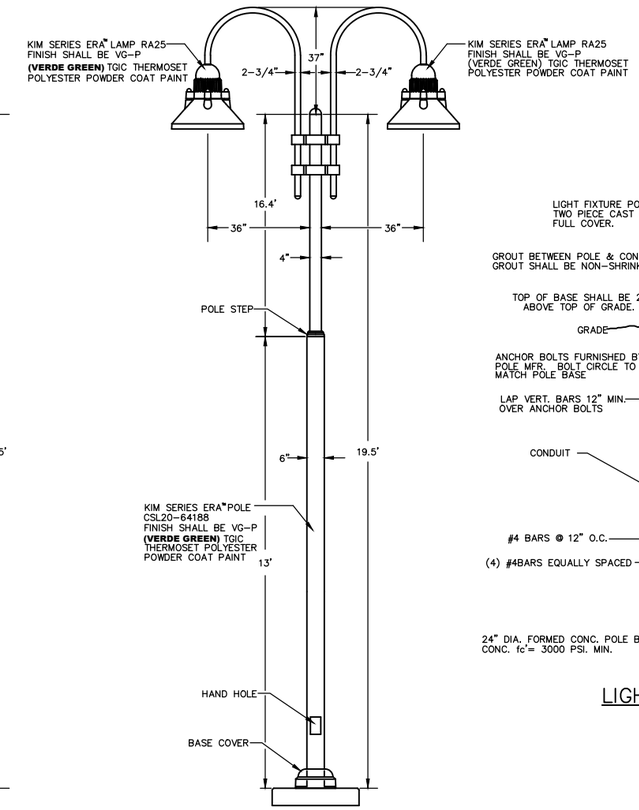

LIGHTING POLE DETAIL

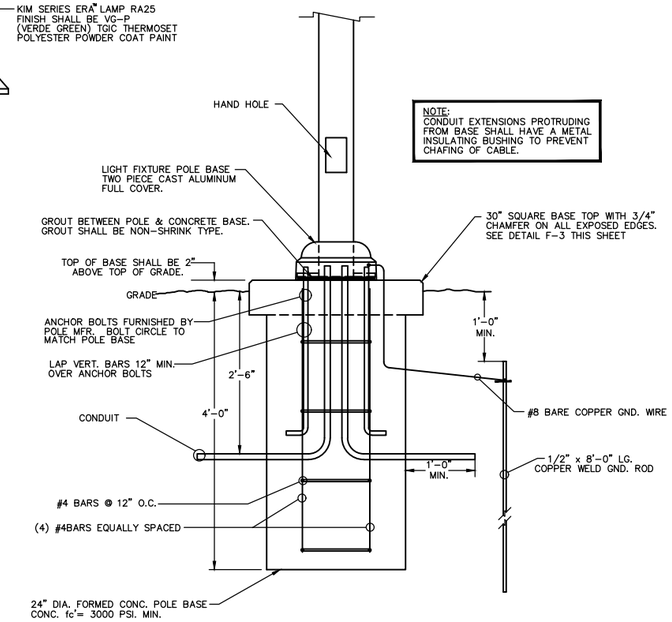

NOTE:
CONDUIT EXTENSIONS PROTRUDING FROM BASE SHALL HAVE A METAL INSULATING BUSHING TO PREVENT CHAFING OF CABLE.

LIGHTING POLE BASE DETAIL

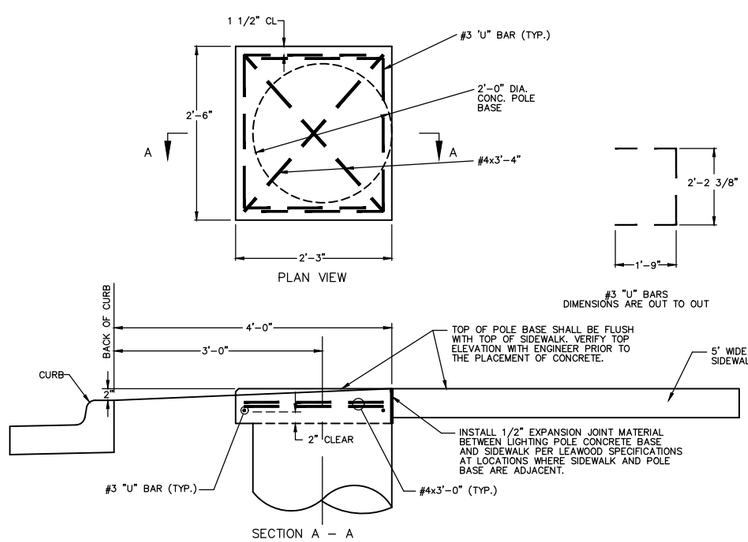

LIGHTING POLE BASE TOP DETAIL ADJACENT TO SIDEWALK

KIM LIGHTING ERA™ SERIES LUMINAIRE POLE INFORMATION FOR RA25 LAMPS						
POLE CATALOG NUMBER	WALL THICKNESS	BOLT CIRCLE DIAMETER	ANCHOR BOLT PROJECTION	ANCHOR BOLTS	BASE COVER DIAMETER	CONDUIT OPENING DIAMETER
CSL20-64188	0.188"	10-1/2"	3.2"	3/4"x30"+4"	14"	5"

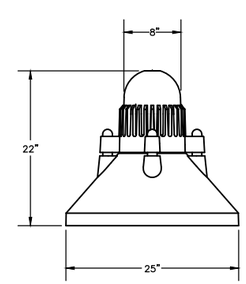

KIM SERIES ERA LAMP RA25
(FLAT LENS)

Housing: The Ballast Housing is a one piece die-cast aluminum component with integral cooling fins. The Reflector Housing is one piece die-cast aluminum. The Ballast Housing attaches to the Reflector Housing with stainless steel fasteners and is sealed with a silicone gasket.
Lens Frame: One piece cast aluminum. Stainless steel hinges provided for attachment to the Reflector Housing. Stainless steel threaded fasteners provide easy access, concealed from normal view. The 3/16" thick clear flat lens seals against the reflector flange by a one piece extruded silicone gasket with fused seam, to produce a fully sealed optical chamber.
Mounting: Stainless steel bolts are provided to attach the luminaire to the crook arm or swept arm mounting.
Reflector Module: Specular Alzak® optical segments are rigidly mounted within an aluminum enclosure which attaches to the Reflector Housing as a one piece module. Reflectors are field rotatable in 90° increments. All sockets are factory prewired with a quick-disconnect plug for the ballast module, with wires passing through a silicone gasket to maintain sealed optical chamber integrity. The optical segments are positioned so that reflected light does not pass through the lamp arc tube. The horizontal metal halide lamp reflectors are equipped with a pin-oriented mogul base socket with a molded silicone lamp stabilizer. All vertical reflectors, HPS horizontal reflectors, and Pulse Start reflectors are equipped with a mogul base socket rated 4KV. All optical systems are interchangeable within the housing.
Electrical Module: All electrical components are UL and CSA recognized, mounted on a single plate and factory prewired with quick-disconnect plugs for attachment to the incoming wires and the socket wires. The module attaches inside the housing using keyhole slots. All ballasts are high power factor with starting temperatures of -40°F for HPS and -20°F for MH lamp modes.
Finish: Super TGIC thermoset polyester powder coat paint, 2.5 mil nominal thickness, applied over a chromate conversion coating; A.S.T.M. 2500 hour salt spray test endurance rating. Standard colors are Black, Dark Bronze, Light Gray, Platinum Silver, or White. Custom colors are available and subject to additional charges, minimum quantities and longer lead times. Consult representative.
Certifications: UL Listed to U.S. and Canadian safety standards for wet locations. Fixture manufacturer shall employ a quality program that is audited to ISO9001 standards.

LUMINAIRE DETAIL

City of Leawood

ENGINEERING SERVICES:
DIVISION OF DESIGN:
DEPARTMENT OF PUBLIC WORKS
SURVEYING SERVICES:
DIVISION OF DESIGN:
DEPARTMENT OF PUBLIC WORKS

REVISIONS	DATE	BY

DATE: SEPTEMBER 1999
DESIGNED BY: DWL
DRAWN BY: CLM
CHECKED BY: DWL
SCALE: NONE

SUBDIVISION NAME
SPECIAL STREET LIGHT POLE DETAILS

SHEET NO.	TOTAL SHEETS
42	43

XREF DRAWING:

DRAWING: M:\LEAWOOD STANDARDS\STREET LIGHTS\DWG\POLE.DWG

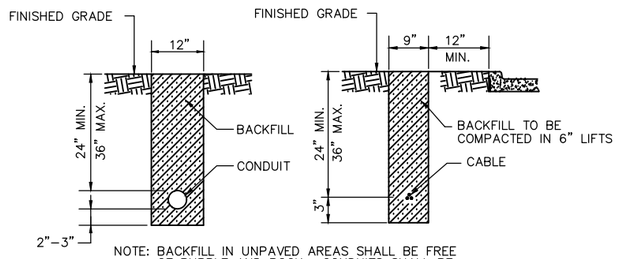

NOTE: BACKFILL IN UNPAVED AREAS SHALL BE FREE OF RUBBLE AND ROCK. CONDUITS SHALL BE PITCHED TO DRAIN.

TRENCHING IN UNPAVED AREAS
No Scale

TRENCHING

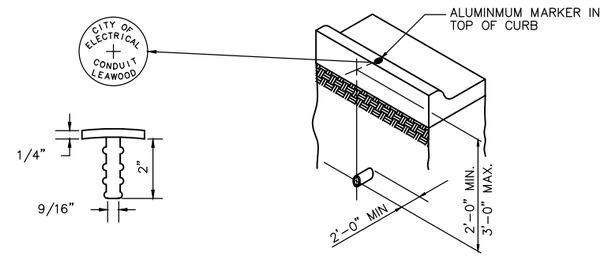

CONDUIT SHALL BE PLACED 2'–0" TO 3'–0" BELOW THE TOP OF CURB ELEVATION AND SHALL EXTEND 2'–0" MINIMUM BEYOND THE BACK OF CURB. CONDUIT SHALL BE INSTALLED TO DRAIN, AND ALL ENDS SHALL BE THREADED AND CAPPED. AN ALUMINUM MARKER SHALL BE PLACED IN THE TOP OF THE CURB DIRECTLY OVER THE CONDUIT. ALUMINUM MARKERS WILL BE FURNISHED BY THE CITY.

CONDUIT MARKING DETAIL

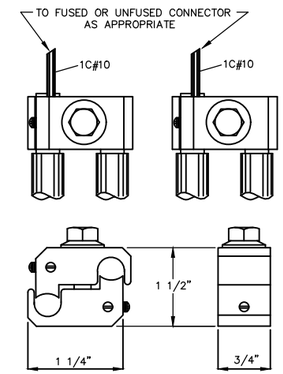

FARGO CONNECTOR

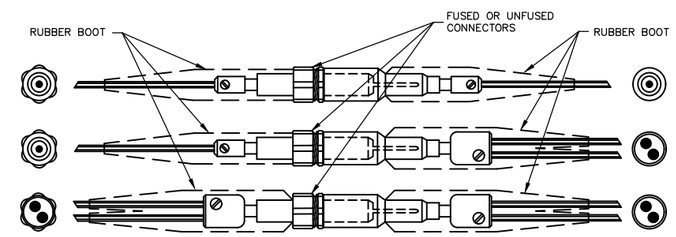

FUSED OR UNFUSED CONNECTOR

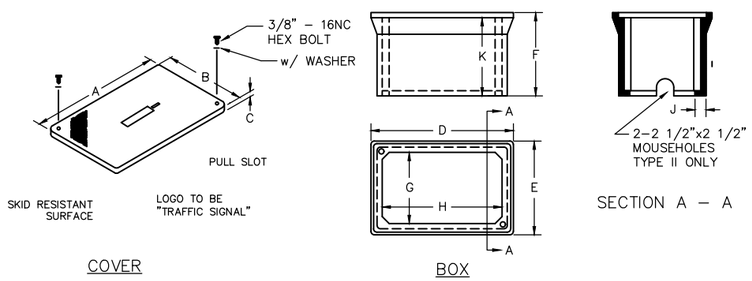

COVER

BOX

SECTION A – A

TYPE	DIMENSIONS (IN.)									
	A	B	C	D	E	F	G	H	J	K
I	12 7/8	12 7/8	3/4	14	14	12 3/4	10 1/2	10 1/2	1	12
II	18 1/2	11 1/2	3/4	20 1/2	13 1/2	12	10 1/4	17 1/4	3/8	11 1/4

FIBERGLASS REINFORCED POLYMER CONCRETE JUNCTION BOX DETAILS
NOT TO SCALE

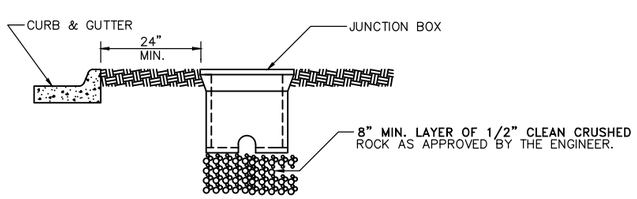

JUNCTION BOX INSTALLATION DETAIL

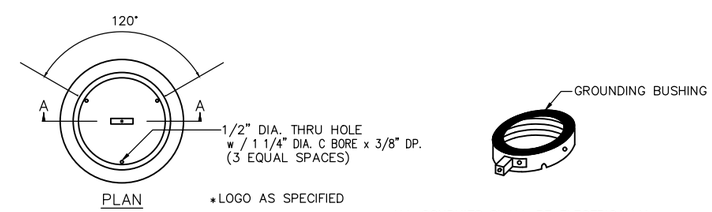

PLAN

*LOGO AS SPECIFIED

** ALL CONDUITS SHALL BE ELECTRICALLY BONDED BY A GROUNDING BUSHING AND #6 AWG BARE COPPER WIRE.

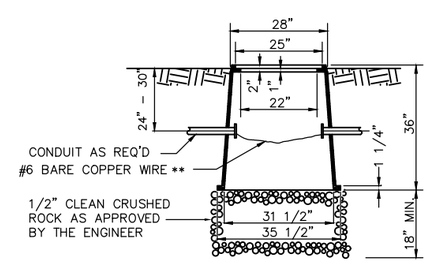

SECTION A – A

NOTE:
SERVICE BOX MATERIAL TO BE AN AGGREGATE CONSISTING OF SAND AND GRAVEL BOUND TOGETHER WITH A POLYMER AND REINFORCED WITH A CONTINUOUS WOVEN GLASS STRANDS. THE MATERIAL MUST HAVE THE FOLLOWING MECHANICAL PROPERTIES:

COMPRESSIVE STRENGTH – 11,000 PSI
TENSILE STRENGTH – 1700 PSI
FLEXURAL STRENGTH – 7500 PSI

FIBERGLASS REINFORCED POLYMER CONCRETE SERVICE BOX
NOT TO SCALE

City of Leawood

ENGINEERING SERVICES:
DIVISION OF DESIGN:
DEPARTMENT OF PUBLIC WORKS
SURVEYING SERVICES:
DIVISION OF DESIGN:
DEPARTMENT OF PUBLIC WORKS

REVISIONS	DATE	BY

DATE: SEPTEMBER 1999
DESIGNED BY: DWL
DRAWN BY: CLM
CHECKED BY: DWL
SCALE: NONE

SUBDIVISION NAME
STREET LIGHT WIRING DETAILS

SHEET NO.	TOTAL SHEETS
43	43

XREF DRAWING:

DRAWING: M:\LEAWOOD STANDARDS\STREET LIGHTS\DWG\WIRING.DWG